APPLICATION NOTE MP03
January 2000

VARIAN

Care and Feeding of TriScroll™ Vacuum Pumps

The TriScroll vacuum pump design has successfully entered the marketplace and demonstrated that a well engineered, well thought out product will be accepted. The purpose of this note is to explain how proper vacuum practice applied to the pump and its system will yield trouble free system operation.

After reviewing the basic elements of the pump (materials, pumping action, special features), we will focus on the often misunderstood gas ballast feature and on the application of the VPI (Vacuum Pump Isolation) valve to the TriScroll pump to ensure proper operation.

Overview of the TriScroll™ Pump

The pumping action of the TriScroll pump is based on principles approximately 100 years old and resurrected recently, first as a helium pump and most recently as a vacuum pump.

As shown in Illustration 1, the business end of the pump consists of a matched pair of helical scrolls, one stationary. The other does not rotate; rather it orbits the fixed rotor. During this orbit, a volume of gas is trapped between the scrolls and is 'squeezed' as the orbit continues. There can be multiple such trapped volumes, depending on the specific helix design. The success of this technology is dependent on advanced machining techniques that make it possible to make the closely toleranced scroll sets inexpensively.

Varian Vacuum Technologies has developed analytical computer programs to analyze and synthesize scroll sets to examine any desired combination of rotor diameter, crank offset and helical scroll pitch to produce a given vacuum performance. The unique and patented TriScroll design makes a compact, highly efficient vacuum pump for general vacuum usage and applications by staging the pumping action with two sets of scrolls.

The first stage, which pumps from inner diameter to outer, consists of three parallel scroll wraps. Since the gas at this stage is at its minimum density, the three parallel pumps are more efficient than one longer scroll wrap. After this initial compression, the gas enters the second stage, which is one scroll wrap and physically is located on the other side of the same disk as the first stage. The second

Illustration 1 – The business end of the pump consists of a matched pair of helical scrolls, one stationary. The other does not rotate.

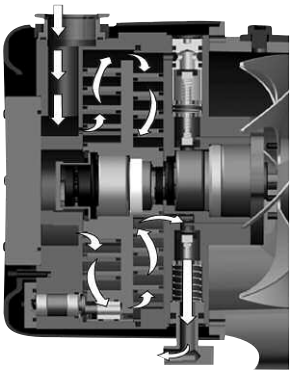

stage flow is from outer diameter to inner, as shown in Illustration 2. This staging, with the scrolls on each side of a disk, yields a compact, highly efficient vacuum pump.

The orbiting and fixed scroll sets are closely fitted together axially. To provide a positive seal between the compression volumes and a 'lubricant' between the rubbing metal surfaces, there is a tip seal installed on the edge of the scroll. It is a slippery compound backed by a urethane foam strip that maintains the 'push' on the slippery seal surface to make a positive seal.

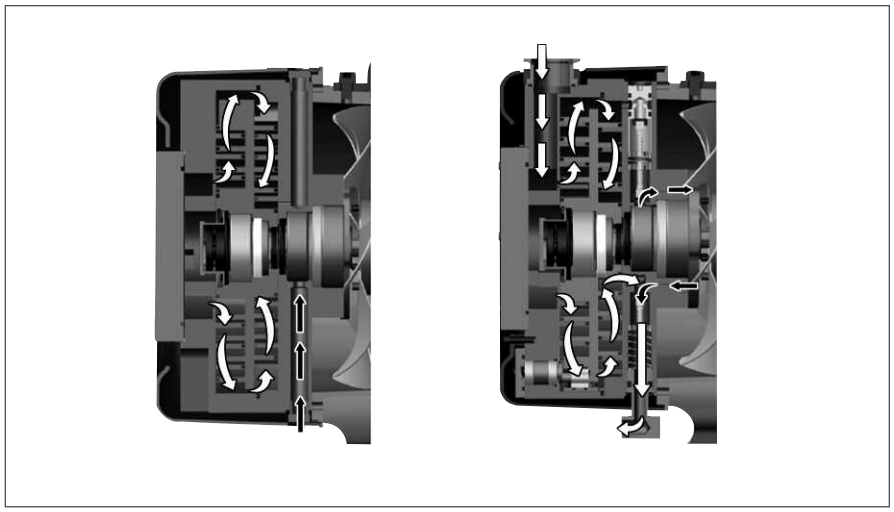

Illustration 2 – TriScroll Gas Flow

Special Features of the TriScroll

1. Automatic Bypass

During the initial pumpdown from atmospheric pressure, the first stage of the pump actually raises the pressure above atmospheric pressure. To avoid wasting motor power further raising the pressure of this gas, there is an automatic bypass valve that opens during this phase of the process, allowing the high pressure gas to bypass the second stage of the pump and proceed directly to the exhaust. When the vacuum chamber pressure declines to about 400 torr, the bypass valve automatically closes and the full pumping action of the pump is ensured. See Illustration 3.

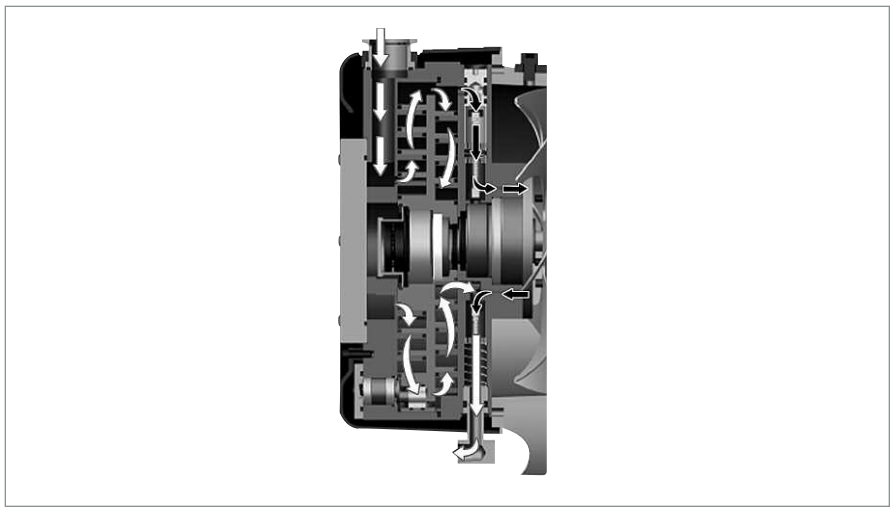

Illustration 3 – Automatic Bypass Valve

2. Optional Bearing Purge

In 'wet' applications, we can open up a purge port that will feed dry gas to the bearings, assuring they will not be adversely affected by the high humidity. This purge is normally plugged. It would be used, for instance, when the TriScroll would be a backing pump for a cryogenic vacuum pump, which concentrates water vapor and stores it as a solid ice. When regenerated, this water is released quickly to the primary pump. Turning this feature 'on' consists of replacing a small solid plug with a sintered metal plug and takes minutes. See Illustration 4.

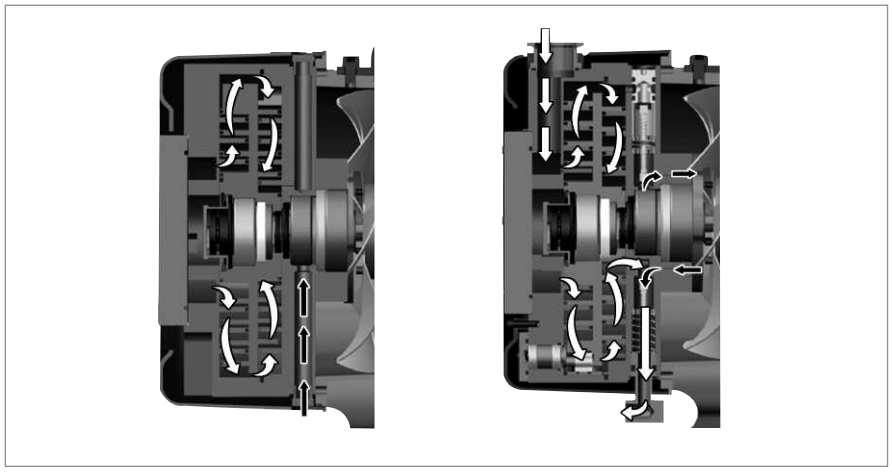

Illustration 4 – TriScroll Bearing Purge Flow (optional)

3. Automatic Gas Ballast

If water vapor enters a primary pump inlet in sufficient quantities, when the vapor is compressed it will change phase and become a liquid. This event can cause the pump to become severely compromised. At the least, the phase change lowers the volumetric efficiency of the pump. At the worst, the pump can break trying to compress the liquid. This is not a new phenomenon - it has been recognized for at least 65 years. The solution, as engineered into the TriScroll, is to admit a small amount of atmospheric (or, in severe cases, bottled) gas. This gas ballast prevents the water vapor from crossing the phase boundary by limiting the amount of the compression applied to the vapor. In effect, it adsorbs part of the compression. Base pressure of the TriScroll pump is specified with the gas ballast in affect. See Illustration 5.

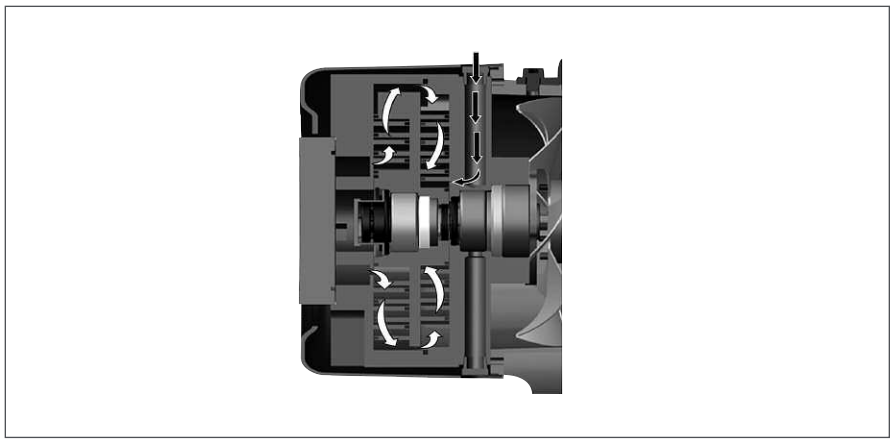

Illustration 5 – TriScroll Gas Ballast Flow

4. VPI Valve

In normal operation, the tip seal of the TriScroll will wear over time and produce a minimal amount of particulates. More importantly, the customer's process may produce excessive amounts of particulates that can lodge in the pump. If there is a power outage or the pump power is inadvertently removed, the pump will stop and, if proper vacuum practice is not used, the particulates in the pump may be driven backwards into the system. In older systems which use a wet pump, there is usually an analgous 'anti-suckback' valve to prevent the back flow of oil.

Proper vacuum practice in this case dictates that the pump be isolated upon power loss. Further, the pump should be vented from the system end to drive particulates toward the exhaust. Even further, when power is restored, the valve should not open until there is essentially no pressure in the pump. This functionality will assure that what's in the pump, whether self-generated or from the system, will not flow backwards to the system.

Varian's Vacuum Pump Isolation (VPI) valve (Illustration 6) accomplishes all of this in a small, efficient package. Unless the customer has a method for achieving the preferred functionality another way or is not concerned with particulates, the VPI valve should be standard on TriScroll installations.

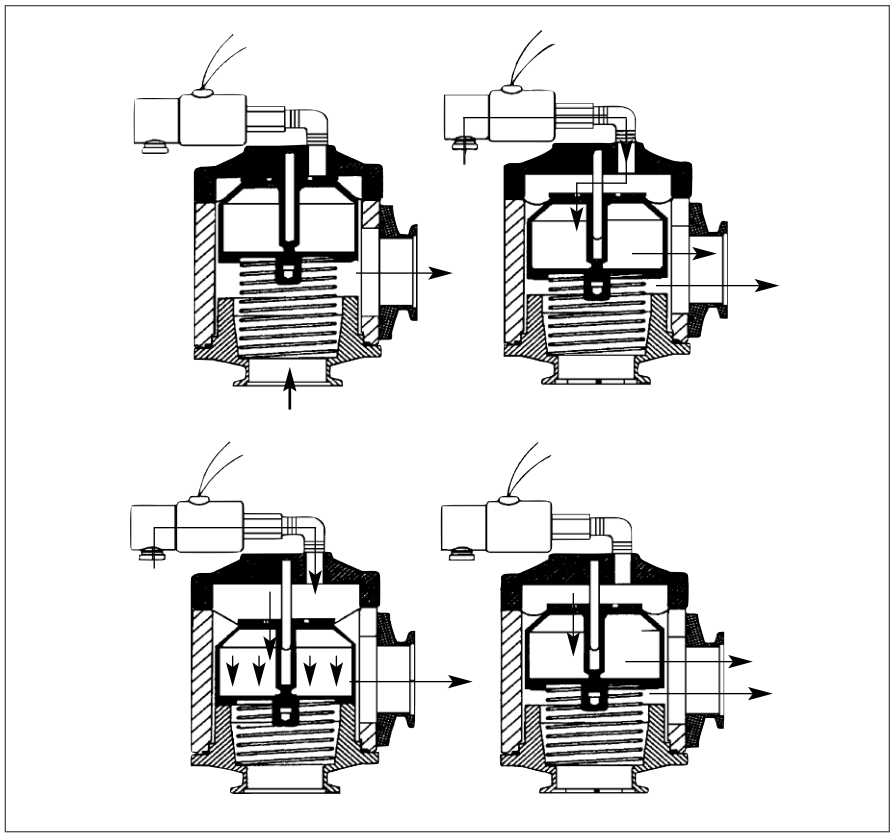

Illustration 6 – VPI Valve

1/2000 ANMP03