VARIAN
vacuum technologies

DS102 1Ph
DS202 1Ph
DS302 1Ph
DS402 1Ph
DS402 3Ph
DS602 1Ph
DS602 3Ph
Dual Stage Rotary Vane Pumps

MANUALE DI ISTRUZIONI

BEDIENUNGSHANDBUCH

NOTICE DE MODE D'EMPLOI

INSTRUCTION MANUAL

Model 949-9315
Model 949-9320
Model 949-9325
Model 949-9330
Model 949-9331
Model 949-9335
Model 949-9336

87-900-937-01(F)
JANUARY 2006

DS102 – DS202 – DS302

DS402 – DS602

VARIAN

vacuum technologies

Dear Customer,

Thank you for purchasing a VARIAN vacuum product. At VARIAN Vacuum Technologies we make every effort to ensure that you will be satisfied with the product and/or service you have purchased.

As part of our Continuous Improvement effort, we ask that you report to us any problem you may have had with the purchase or operation of our product. On the back side you find a Corrective Action Request form that you may fill out in the first part and return to us.

This form is intended to supplement normal lines of communications and to resolve problems that existing systems are not addressing in an adequate or timely manner.

Upon receipt of your Corrective Action Request we will determine the Root Cause of the problem and take the necessary actions to eliminate it. You will be contacted by one of our employees who will review the problem with you and update you, with the second part of the same form, on our actions.

Your business is very important to us. Please, take the time and let us know how we can improve.

Sincerely,

Sergio PIRAS

Vice President and General Manager
VARIAN Vacuum Technologies

Note: Fax or mail the Customer Request for Action (see backside page) to VARIAN Vacuum Technologies (Torino) - Quality Assurance or to your nearest VARIAN representative for onward transmission to the same address.

CUSTOMER REQUEST FOR CORRECTIVE / PREVENTIVE / IMPROVEMENT ACTION

TO : VARIAN VACUUM TECHNOLOGIES TORINO - QUALITY ASSURANCE

FAX N° : XXXX - 011 - 9979350

ADDRESS: VARIAN S.p.A. - Via F.lli Varian, 54 - 10040 Leinì (Torino) - Italy

E-MAIL : marco.marzio@varianinc.com

NAME	COMPANY	FUNCTION
_____	_____	_____

ADDRESS : _____

TEL. N° : _____ FAX N° : _____

E-MAIL : _____

PROBLEM / SUGGESTION :

_____

REFERENCE INFORMATION (model n°, serial n°, ordering information, time to failure after installation, etc.) :

_____

DATE _____

CORRECTIVE ACTION PLAN / ACTUATION LOG N° _____
(by VARIAN VTT)

_____

XXXX = Code for dialing Italy from your country (es. 01139 from USA; 00139 from Japan, etc.)

VARIAN

ISTRUZIONI PER L'USO 1

GEBRAUCHSANLEITUNG 3

MODE D'EMPLOI 5

INSTRUCTIONS FOR USE 7

TECHNICAL INFORMATION 9

SECTION I 9
TECHNICAL DESCRIPTION 9
LUBRICATION 9
VACUUM SEALS 10
GAS BALLAST VALVE 10
ANTI-SUCKBACK DEVICE 10
TECHNICAL DATA 14
DIMENSIONS 15
SAFETY PRECAUTIONS 17
TRANSPORT AND INSTALLATION 17
PRELIMINARY OPERATIONS 17
SECTION II 18
ELECTRICAL MOTORS 18
Single phase universal motors 18
Three phase universal motors 20
CONNECTIONS TO THE INLET AND EXHAUST FLANGES 21
STARTING AND RUNNING THE PUMP 21
STOPPING THE PUMP 22
SAFETY RULES 22
WARNING NOTES ⚠ 22
CAUTION NOTES ☞ 23
MAINTENANCE ACTIONS 23
LUBRICANTS 24
SCHEDULED MAINTENANCE CARDS 26
UNSCHEDULED MAINTENANCE CARDS 31
TROUBLESHOOTING AND CORRECTIVE ACTION 61
SPARE PARTS LIST 63

INFORMAZIONI GENERALI

Questa apparecchiatura è destinata ad uso professionale. L'utilizzatore deve leggere attentamente il presente manuale di istruzioni ed ogni altra informazione addizionale fornita dalla Varian prima dell'utilizzo dell'apparecchiatura. La Varian si ritiene sollevata da eventuali responsabilità dovute all'inosservanza totale o parziale delle istruzioni, ad uso improprio da parte di personale non addestrato, ad interventi non autorizzati o ad uso contrario alle normative nazionali specifiche.
Le pompe DS102 1Ph, DS202 1Ph, DS302 1Ph, DS402 1Ph, DS402 3Ph, DS602 1Ph e DS602 3Ph sono delle pompe rotative bistadio a palette, a tenuta in bagno d'olio, azionate da motore elettrico mono o trifase.
Queste pompe da alto vuoto sono adatte al pompaggio di gas non corrosivi.
Nei paragrafi seguenti sono riportate tutte le informazioni necessarie a garantire la sicurezza dell'operatore durante l'utilizzo dell'apparecchiatura. Informazioni dettagliate sono fornite nell'appendice "Technical information".
Questo manuale utilizza le seguenti convenzioni:

PERICOLO!

I messaggi di pericolo attirano l'attenzione dell'operatore su una procedura o una pratica specifica che, se non eseguita in modo corretto, potrebbe provocare gravi lesioni personali.

ATTENZIONE!

I messaggi di attenzione sono visualizzati prima di procedure che, se non osservate, potrebbero causare danni all'apparecchiatura.

NOTA

Le note contengono informazioni importanti estrapolate dal testo.

IMMAGAZZINAMENTO

Durante il trasporto e l'immagazzinamento delle pompe non devono essere superate le seguenti condizioni ambientali:
- temperatura: da -20 °C a +70 °C
- umidità relativa: 0 - 95% (non condensante)

PREPARAZIONE PER L'INSTALLAZIONE

La pompa viene fornita in un imballo protettivo speciale; se si presentano segni di danni, che potrebbero essersi verificati durante il trasporto, contattare l'ufficio vendite locale.
Il peso dell'imballo, comprensivo della pompa, è, al massimo, di circa 32 [Kg].
Durante l'operazione di disimballaggio, prestare particolare attenzione a non lasciar cadere la pompa e a non sottoporla ad urti o vibrazioni.
Non disperdere l'imballo nell'ambiente. Il materiale è completamente riciclabile e risponde alla direttiva CEE 85/399 per la tutela dell'ambiente.

NOTA

La pompa non può essere danneggiata rimanendo semplicemente esposta all'atmosfera. Si consiglia comunque di mantenerla chiusa fino al momento dell'installazione sul sistema onde evitare eventuale inquinamento da polvere.

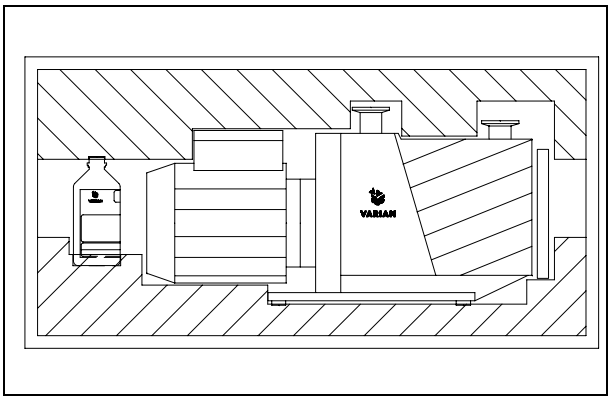

INSTALLAZIONE

Non installare e/o utilizzare la pompa in ambienti esposti ad agenti atmosferici (pioggia, gelo, neve), polveri, gas aggressivi, in ambienti esplosivi o con elevato rischio di incendio.
Durante il funzionamento è necessario che siano rispettate le seguenti condizioni ambientali:
- temperatura: da +12 °C a +40 °C
- umidità relativa: 0 - 95% (non condensante).

ATTENZIONE!

Prima di avviare la pompa, occorre procedere al rifornimento di olio lubrificante, poichè la pompa viene fornita scarica.

PERICOLO!

Togliere i tappi di protezione posti sulle flange di aspirazione e scarico prima di ogni successiva operazione. L'aria contenuta all'interno della pompa, in caso di accensione involontaria, può proiettarli contro l'operatore.

PERICOLO!

Durante l'installazione prestare la massima attenzione che la flangia di aspirazione sia collegata alla camera da evacuare e che la flangia di scarico non sia tappata (vedere la figura seguente).
La pompa non deve essere usata come compressore.
La massima pressione interna al contenitore dell'olio non deve superare 1,5 bar (abs).
L'inosservanza di queste precauzioni può causare danni alla macchina ed all'operatore.

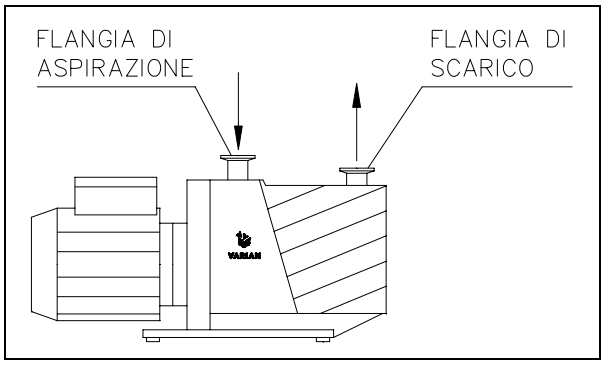

ATTENZIONE!

Controllare che la tensione di alimentazione corrisponda a quella indicata sul cartellino del motore.

Collegare la pompa all'alimentazione.

ATTENZIONE!

Nel caso di motore trifase, una inversione di polarità provoca l'inversione del verso di rotazione della pompa, con conseguenti possibili danni di natura meccanica.

USO

Prima di mettere la pompa in servizio effettivo è necessario, per il raggiungimento del vuoto limite, far marciare per circa un'ora la pompa con zavorra aperta allo scopo di eliminare l'umidità nell'olio.
L'accensione della pompa non richiede particolari manovre; è sufficiente collegarla all'alimentazione elettrica agendo sull'interruttore bipolare (versione con motore monofase) o onnipolare (versione con motore trifase).

PERICOLO!

La pompa è progettata per operare con fluidi neutri o non corrosivi. È assolutamente vietato l'impiego con sostanze potenzialmente esplosive o infiammabili.

Lo spegnimento della pompa non richiede particolari manovre; è sufficiente scollegarla dall'alimentazione elettrica agendo sull'interruttore bipolare (versione con motore monofase) o onnipolare (versione con motore trifase).

MANUTENZIONE

Il personale addetto alla condotta ed alla manutenzione della pompa deve essere ben addestrato e deve avere un'approfondita conoscenza delle norme antinfortunistiche.

PERICOLO!

Le alte tensioni possono causare morte al contatto. Operare sempre con la massima cautela e secondo le norme antinfortunistiche in vigore.

PERICOLO!

Quando la macchina è alimentata prestare attenzione per la presenza di parti in movimento e di alta tensione.

PERICOLO!

Nel caso si debba procedere ad operazioni di manutenzione della pompa al termine di un periodo di esercizio, è necessario lasciarla raffreddare, poichè la temperatura esterna può superare i 60 °C.

PERICOLO!

Escludere sempre l'alimentazione della pompa prima di compiere operazioni di manutenzione. Apporre specifici cartelli di avvertenza: APPARECCHIATURA IN MANUTENZIONE - NON INSERIRE L'ALIMENTAZIONE, in corrispondenza dell'interruttore di alimentazione. Al termine ripristinare i dispositivi di sicurezza.

PERICOLO!

Non effettuare la sostituzione dell'olio subito dopo l'arresto della macchina, in quanto la temperatura dello stesso può essere elevata.

ATTENZIONE!

In fase di sostituzione di pezzi, operare con attenzione. In particolare nel caso di adozione di motore trifase, una inversione di polarità provoca l'inversione del verso di rotazione della pompa, con conseguenti possibili danni di natura meccanica.

NOTA

Prima di rispedire al costruttore una pompa per riparazioni è indispensabile compilare e far pervenire al locale ufficio vendite la scheda "Sicurezza e Salute" allegata al presente manuale di istruzioni. Copia della stessa deve essere inserita nell'imballo della pompa prima della spedizione.

Qualora una pompa dovesse essere rottamata, procedere alla sua eliminazione nel rispetto delle normative nazionali specifiche.

ALLGEMEINE HINWEISE

Dieses Gerät ist für den professionellen Gebrauch bestimmt. Vor dem Gebrauch soll der Benutzer dieses Handbuch sowie alle weiteren von Varian mitgelieferten Zusatzinformationen genau lesen. Bei vollständiger bzw. teilweiser Nichtbeachtung der enthaltenen Hinweise, unsachgemäßem Gebrauch durch ungeschultes Personal, nicht autorisierten Eingriffen und Benutzung unter Mißachtung der nationalen Bestimmungen übernimmt Firma Varian keinerlei Haftung.
Die Pumpen DS102 1Ph, DS202 1Ph, DS302 1Ph, DS402 1Ph, DS402 3Ph, DS602 1Ph und DS602 3Ph sind dichte ölbadgeschmierte zweistufige Flügelzellenpumpen, die von einem Ein- oder Dreiphasenstrommotor betätigt werden.
Diese Hochvakuumpumpen eignen sich für das Pumpen von nicht korrosiven Gasen.
In den folgenden Abschnitten sind alle erforderlichen Informationen für die Sicherheit des Bedieners bei der Verwendung des Geräts aufgeführt. Detaillierte technische Informationen sind im Anhang "Technical Information" enthalten.
In dieser Gebrauchsanleitung werden Sicherheitshinweise folgendermaßen hervorgehoben:

GEFAHR!

Die Gefahrenhinweise richten die Aufmerksamkeit des Bedieners auf eine spezielle Prozedur oder Praktik, die bei unkorrekter Ausführung schwere Personenschäden zur Folge haben könnte.

ACHTUNG!

Die Warnhinweise vor bestimmten Prozeduren machen den Bediener darauf aufmerksam, daß bei Nichteinhaltung Schäden am Gerät entstehen können.

ANMERKUNG

Die Anmerkungen enthalten wichtige Informationen, die aus dem Text hervorgehoben werden.

LAGERUNG

Während des Transports und der Lagerung der Pumpen sollen die folgenden Umgebungsbedingungen gegeben sein:
- Temperatur: -20 °C bis +70 °C
- Relative Feuchtigkeit: 0 - 95% (niederschlagsfrei)

VOR DER INSTALLATION

Die Pumpe wird in einer speziellen Schutzverpackung geliefert. Eventuelle Transportschäden sind der zuständigen örtlichen Verkaufsstelle zu melden.
Das Verpackungsgewicht beträgt, einschließlich der Pumpe, maximal 32 Kg.
Beim Auspacken ist darauf zu achten, daß die Pumpe nicht fallengelassen oder Stößen oder Vibrationen ausgesetzt wird.
Das Verpackungsmaterial ist ordnungsgemäß zu entsorgen. Es ist vollständig recyclebar und entspricht der EG-Richtlinie 85/399 für den Umweltschutz.

ANMERKUNG

Die Pumpe kann, wenn sie einfach der Atmosphäre ausgesetzt ist, nicht beschädigt werden. Sie sollte jedoch bis zur Installation an der Anlage geschlossen bleiben, um Verunreinigungen durch Staub zu vermeiden.

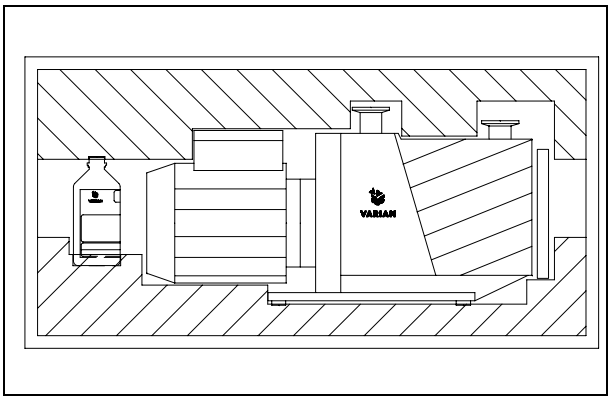

INSTALLATION

Die Pumpe darf nicht in Umgebungen installiert und/oder benutzt werden, die ungeschützt vor Witterungsbedingungen (Regen, Frost, Schnee), Staub und aggressiven Gasen sind und in denen Explosions- oder erhöhte Brandgefahr besteht.
Während des Betriebs sollen die folgenden Umgebungsbedingungen gegeben sein:
- Temperatur: +12 °C bis +40 °C
- Relative Feuchtigkeit: 0 - 95% (niederschlagsfrei).

ACHTUNG!

Die Pumpe ist vor ihrer Inbetriebnahme mit Schmieröl zu füllen, da sie leer geliefert wird.

GEFAHR!

Vor Aufnahme jeglicher Arbeiten sind die Schutzkappen an den Saug- und Druckflanschen zu entfernen. Die im Pumpeninnern enthaltene Luft könnte diese bei unbeabsichtigter Einschaltung gegen den Bediener schleudern.

GEFAHR!

Bei der Installation ist unbedingt darauf zu achten, dass der Saugflansch an die zu entleerende Kammer angeschlossen ist und der Ablassflansch nicht verschlossen ist (siehe nachstehende Abbildung).
Die Pumpe darf nicht als Verdichter verwendet werden.
Der Druck im Ölbehälter darf nicht größer als 1,5 bar (abs) sein.
Bei Nichtbeachtung dieser Anweisungen besteht Schadensgefahr für das Gerät und die Bedienperson.

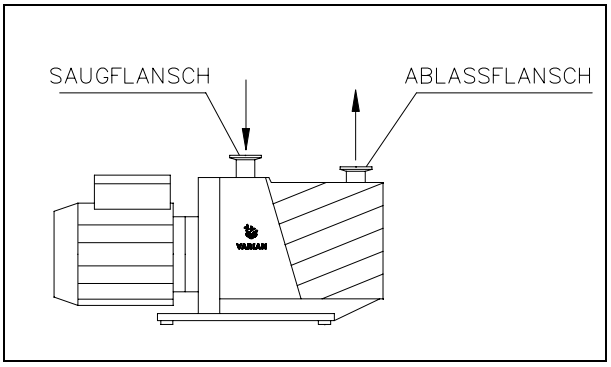

ACHTUNG!

Kontrollieren, daß die Versorgungsspannung mit der Spannungsangabe auf dem Typenschild des Motors übereinstimmt.

Die Pumpe an das Versorgungsnetz anschließen.

ACHTUNG!

Bei Dreiphasenstrommotoren bewirkt eine Polumkehrung die Umkehrung des Drehsinns der Pumpe, was Schäden an der Mechanik zur Folge haben kann.

GEBRAUCH

Vor der eigentlichen Inbetriebnahme der Pumpe ist es zur Erreichung des Grenzvakuums erforderlich, die Pumpe ungefähr eine Stunde mit geöffnetem Ballast laufen zu lassen, um die Feuchtigkeit aus dem Öl zu entfernen.
Die Einschaltung der Pumpe erfordert keine speziellen Schritte, sie braucht nur durch Betätigung des zweipoligen (Version mit Einphasenstrommotor) oder des allpoligen Trennschalters (Version mit Dreiphasenstrommotor) an die elektrische Energieversorgungsquelle angeschlossen werden.

GEFAHR!

Die Pumpe ist für den Betrieb mit neutralen und nicht korrosiven Fluiden konzipiert. Der Einsatz mit potentiell explosions- oder feuergefährlichen Substanzen ist streng verboten.

Die Ausschaltung der Pumpe erfordert keine speziellen Schritte, sie braucht nur durch Betätigung des zweipoligen (Version mit Einphasenstrommotor) oder des allpoligen Trennschalters (Version mit Dreiphasenstrommotor) von der elektrischen Energieversorgungsquelle getrennt zu werden.

WARTUNG

Das für den Betrieb und die Wartung zuständige Personal soll geschult sein und über eine solide Kenntnis der Unfallschutzvorschriften verfügen.

GEFAHR!

Hochspannungen können bei Kontakt tödliche Folgen haben. Es ist stets mit größter Vorsicht und gemäß der geltenden Unfallschutzvorschriften vorzugehen.

GEFAHR!

Bei eingeschaltetem Gerät ist auf Bewegungs- und Hochspannungsteile zu achten.

GEFAHR!

Falls die Pumpe im Anschluß an den Betrieb gewartet werden soll, ist abzuwarten, bis sie abgekühlt ist, da ihre Oberfläche eine Temperatur von 60°C überschreiten kann.

GEFAHR!

Vor Wartungsarbeiten ist die Pumpe stets energiefrei zu schalten. Am Netzschalter sind spezielle Warnschilder “INSTANDHALTUNG AM GERÄT – NICHT EINSCHALTEN” anzubringen. Nach Abschluß der Arbeiten sind die Sicherheitseinrichtungen wieder zu aktivieren.

GEFAHR!

Keine Ölwechsel unmittelbar nach Stillsetzung des Gerätes vornehmen, da die Öltemperatur sehr hoch sein kann.

ACHTUNG!

Bei Ersatz von Teilen ist mit Vorsicht vorzugehen. Insbesondere bei der Version mit Dreiphasenstrommotor bewirkt eine Polumkehrung die Umkehrung des Drehsinns der Pumpe, was Schäden an der Mechanik zur Folge haben kann.

ANMERKUNG

Bevor dem Hersteller eine Pumpe zur Reparatur zurückgesandt wird, ist das Formular “Sicherheit und Gesundheit” in der Anlage zum vorliegenden Handbuch auszufüllen und der lokalen Verkaufsstelle zuzustellen. Eine Kopie des Formulars ist der Pumpenverpackung vor dem Versand beizulegen.

Bei eventueller Verschrottung einer Pumpe ist diese entsprechend der einschlägigen nationalen Vorschriften zu entsorgen.

INDICATIONS GÉNÉRALES

Cet appareillage a été conçu en vue d'une utilisation professionnelle. Il est conseillé à l'utilisateur de lire attentivement cette notice d'instructions ainsi que toute autre indication fournie par Varian avant d'utiliser l'appareil. Varian décline par conséquent toute responsabilité en cas de non-respect total ou partiel des instructions fournies, d'utilisation incorrecte de la part d'un personnel non formé, d'opérations non autorisées ou d'un emploi contraire aux réglementations nationales spécifiques.
Les pompes DS102 1Ph, DS202 1Ph, DS302 1Ph, DS402 1Ph, DS402 3Ph, DS602 1Ph e DS602 3Ph sont des pompes rotatives à deux stades à palettes, étanches en bain d'huile, actionnées par un moteur électrique mono ou triphasé.
Ces pompes à vide poussé sont adaptées au pompage de gaz non corrosifs.
Les paragraphes suivants fournissent toutes les indications nécessaires pour garantir la sécurité de l'opérateur pendant l'utilisation de l'appareillage. Des renseignements plus détaillés se trouvent dans l'appendice “Technical information”.
Cette notice utilise les signes conventionnels suivants :

DANGER!

Les messages de danger attirent l'attention de l'opérateur sur une procédure ou une manœuvre spéciale dont la mauvaise exécution risque de provoquer de graves lésions.

ATTENTION !

Les messages d'attention apparaissent avant certaines procédures dont le non-respect peut endommager sérieusement l'appareillage.

NOTE

Les notes contiennent des renseignements importants, extrapolés du texte.

EMMAGASINAGE

Pendant le transport et l'emmagasinage des pompes, il faut veiller à respecter les conditions environnementales suivantes :
- température: de -20 °C à +70 °C
- humidité relative: 0 - 95% (non condensante)

PRÉPARATION POUR L'INSTALLATION

La pompe est fournie dans un emballage de protection spécial; si l'on constate des marques de dommages pouvant s'être produits pendant le transport, contacter aussitôt le bureau de vente local.
Le poids total de l'emballage et de la pompe est au maximum de 32 Kg.
Pendant l'opération d'ouverture de l'emballage, veiller tout particulièrement à ne pas laisser tomber la pompe et à ne lui faire subir aucun choc ni aucune vibration
Ne pas jeter l'emballage dans la nature. Le matériel est entièrement recyclable et il est conforme à la directive CEE 85/399 en matière de protection de l'environnement.

NOTE

La pompe ne peut être endommagée en restant simplement exposée à l'atmosphère. Il est de toute façon conseillé de la garder dans son emballage jusqu'au moment de sa mise en fonction afin d'éviter toute pollution due à la poussière

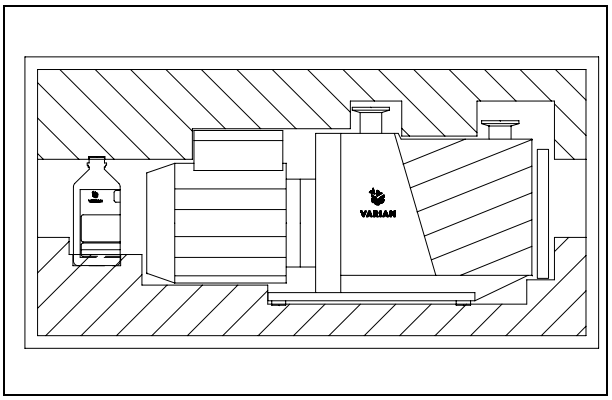

INSTALLATION

Ne pas installer et/ou utiliser la pompe dans des milieux exposés aux agents atmosphériques (pluie, gel, neige), à des poussières, à des gaz agressifs ainsi que dans des milieux explosifs ou à risque élevé d'incendie.
Pendant le fonctionnement, il est nécessaire de respecter les conditions environnementales suivantes :
- Température: de +12 °C à +40 °C
- Humidité relative : 0 - 95% (non condensante).

ATTENTION !

Avant toute utilisation de la pompe, il est impératif de procéder à son remplissage en huile de lubrification car elle est livrée vide.

DANGER!

Avant toute autre opération, retirer les bouchons de protection placés sur les brides d'aspiration et de vidange. En cas de mise en marche inopinée de l'appareillage, l'air contenu à l'intérieur de la pompe peut les projeter contre l'opérateur.

DANGER!

Pendant l'installation, faire très attention que la bride d'aspiration soit reliée à la chambre à vider et que la bride d'évacuation ne soit pas bouchée (voir la figure ci-après).
La pompe ne doit pas être utilisée comme un compresseur.
La pression maximale à l'intérieur du réservoir d'huile ne doit pas dépasser 1,5 bar (abs).
Le non-respect de ces précautions peut entraîner un danger pour l'opérateur et l'endommagement de la machine.

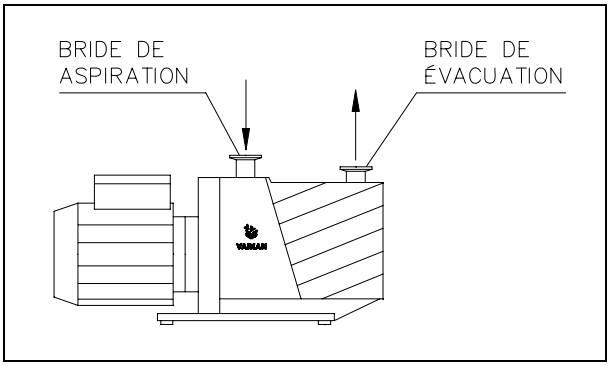

ATTENTION !

Contrôler que la tension d'alimentation correspond à la tension indiquée sur la plaquette du moteur.

Brancher la pompe à la source d'alimentation.

ATTENTION !

En cas de moteur triphasé, une inversion de polarité provoque l'inversion du sens de rotation de la pompe et peut entraîner des dommages de nature mécanique

UTILISATION

Avant la mise en service de la pompe, il est nécessaire, pour atteindre le vide maximum, de faire fonctionner la pompe pendant environ une heure avec le reniflard ouvert afin de supprimer l'humidité de l'huile.
La mise en marche de la pompe ne requiert aucune manœuvre particulière ; il suffit de la brancher à l'alimentation électrique et d'agir sur l'interrupteur bipolaire (version avec moteur monophasé) ou unipolaire (version avec moteur triphasé).

DANGER!

La pompe a été conçue pour fonctionner avec des fluides neutres ou non corrosifs. L'emploi de substances potentiellement explosives ou inflammables est strictement interdit.

L'arrêt de la pompe ne requiert aucune manœuvre particulière ; il suffit de la débrancher de l'alimentation électrique en agissant sur l'interrupteur bipolaire (version avec moteur monophasé) ou unipolaire (version avec moteur triphasé).

MAINTENANCE

Le personnel chargé de la conduite et de la maintenance de la pompe doit avoir reçu la formation nécessaire et posséder une connaissance approfondie des normes de prévention des accidents du travail.

DANGER!

Les hautes tensions peuvent entraîner la mort par contact. Veiller à toujours opérer avec le maximum de prudence et dans le respect des normes de prévention des accidents du travail en vigueur.

DANGER!

Lorsque la machine est sous alimentation, faire attention à la présence d'organes en mouvement et de haute tension.

DANGER!

En cas de nécessité de procéder à des opérations de maintenance de la pompe au terme d'une période de fonctionnement, il est indispensable de la laisser refroidir car sa température extérieure peut être supérieure à 60°C.

DANGER!

Avant toute opération de maintenance, il est impératif de toujours couper l'alimentation de la pompe. Placer les pancartes spécifiques d'avertissement : APPAREILLAGE EN COURS DE MAINTENANCE – NE PAS BRANCHER L'ALIMENTATION, près de l'interrupteur d'alimentation. Au terme des opérations de maintenance, restaurer les dispositifs de sécurité.

DANGER!

Ne pas effectuer la substitution d'huile immédiatement après l'arrêt de la machine car la température de cette dernière peut être élevée.

ATTENTION !

En phase de substitution de pièces, opérer avec le maximum d'attention. En particulier, en cas de moteur triphasé, une inversion de polarité provoque l'inversion du sens de rotation de la pompe et peut entraîner des dommages de nature mécanique.

NOTE

Avant de retourner une pompe au constructeur pour réparation, il est indispensable de remplir et d'adresser au bureau local de vente la fiche "Sécurité et Santé" jointe à la présente notice d'instructions. Une copie de celle-ci devra être mise dans l'emballage de la pompe avant expédition.

En cas de mise au rebut de la pompe, procéder à son élimination conformément aux réglementations nationales en la matière.

GENERAL INFORMATION

This equipment is destined for use by professionals. The user should read this instruction manual and any other additional information supplied by Varian before operating the equipment. Varian will not be held responsible for any events occurring due to non-compliance, even partial, with these instructions, improper use by untrained persons, non-authorized interference with the equipment or any action contrary to that provided for by specific national standards.
The DS102 1Ph, DS202 1Ph, DS302 1Ph, DS402 1Ph, DS402 3Ph, DS602 1Ph and DS602 3Ph pumps are dual-stage, rotary vane pumps oil sealed, driven by a single-phase or three-phase electric motor.
These high vacuum pumps are suitable for pumping non corrosive gases.
The following paragraphs contain all the information necessary to guarantee the safety of the operator when using the equipment. Detailed information is supplied in the appendix "Technical Information".
This manual uses the following standard protocol:

WARNING!

The warning messages are for attracting the attention of the operator to a particular procedure or practice which, if not followed correctly, could lead to serious injury.

CAUTION

The caution messages are displayed before procedures which, if not followed, could cause damage to the equipment.

NOTE

The notes contain important information taken from the text.

STORAGE

When transporting and storing the pumps, the following environmental requirements should not be exceeded:
- temperature: from -20° to +70 °C
- relative humidity: 0 - 95% (non-condensing)

PREPARATION FOR INSTALLATION

The pump is supplied in a special protective packing. If this shows signs of damage which may have occurred during transport, contact your local sales office.
Total weight of the pack, including the pump, is approx. 32 Kg.
When unpacking the pump, be sure not to drop it and avoid any kind of sudden impact or shock vibration to it.
Do not dispose of the packing materials in an unauthorized manner. The material is 100% recyclable and complies with EEC Directive 85/399.

NOTE

Normal exposure to the environment cannot damage the pump. Nevertheless, it is advisable to keep it closed until it is installed in the system, thus preventing any form of pollution by dust.

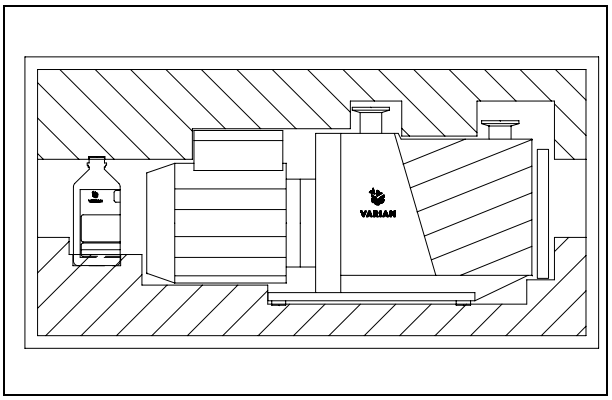

INSTALLATION

Do not install or use the pump in an environment exposed to atmospheric agents (rain, snow, ice), dust, aggressive gases, or in explosive environments or those with a high fire risk. During operation, the following environmental conditions must be respected:
- temperature: from +12 °C to +40 °C
- relative humidity: 0 - 95% (non-condensing)

CAUTION

Before starting the pump, fill up with lubricating oil as the pump is delivered empty.

WARNING!

Take out the protective caps on the suction and exhaust flanges before doing anything else. In the event of an accidental start-up, the air inside the pump could violently expel the protective caps and harm the operator.

WARNING!

During installation, pay maximum attention that the suction flange is connected to the vacuum chamber and the exhaust flange is not closed (see the following figure).
The pump must not be used as a compressor.
Maximum pressure inside the oil container must not exceed 1.5 bar (abs.)
Non-observance of these precautions may be dangerous for the machine and the operator.

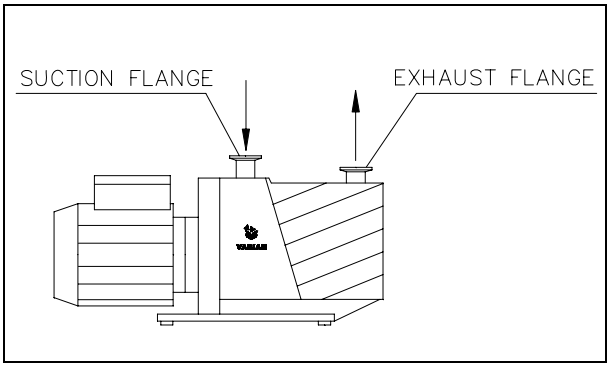

CAUTION

Check that your electrical mains voltage corresponds to that indicated on the motor's plate.

Connect the pump to the power supply.

CAUTION

Pay special attention to the three-phase motor, where an inversion of polarity causes inversion of the direction of rotation of the pump with consequent possibilities of mechanical damage.

USE

Before being put into service, in order to reach maximum vacuum, the pump must be left running for about an hour with the gas ballast valve open. This will eliminate any humidity from the oil.
There are no special procedures for switching the pump on; it needs only to be connected to the electric power by means of the bipolar switch (version with single-phase motor) or of the multipolar switch (version with three-phase motor).

WARNING!

The pump is designed for operation with neutral or non-corrosive fluids. It is absolutely forbidden to use potentially explosive or flammable substances.

There are no special procedures for switching the pump off; it needs only to be disconnected from the electric power by means of the bipolar switch (version with single-phase motor) or of the multipolar switch (version with three-phase motor).

MAINTENANCE

Personnel responsible for pump operation and maintenance must be well-trained and must be aware of the accident prevention rules.

WARNING!

Death may result from contact with high voltages. Always take extreme care and observe the accident prevention regulations in force.

WARNING!

When machine is powered take care on account of moving parts and high voltages.

WARNING!

If you have to perform maintenance on the pump after a considerable time in operation, leave it to cool as temperature of the outer surface may be in excess of 60 °C.

WARNING!

Always disconnect the power supply to the pump before starting maintenance work. Place a special warning signs over the power supply breaker switch: MACHINE UNDERGOING MAINTENANCE - DO NOT POWER ON. When finished, remove the safety warning.

WARNING!

Do not change the oil immediately after stopping the machine as the oil temperature may still be high.

CAUTION

When replacing a part, take great care. Pay special attention to the three-phase motor, where an inversion of polarity causes inversion of the direction of rotation of the pump with consequent possibilities of mechanical damage.

NOTE

Before returning the pump to the constructor for repairs the "Health and Safety" sheet attached to this instruction manual must be filled-in and sent to the local sales office. A copy of the sheet must be inserted in the pump package before shipping.

If a pump is to be scrapped, it must be disposed of in accordance with the specific national standards.

SECTION I

TECHNICAL DESCRIPTION

The DS102 1Ph, DS202 1Ph, DS302 1Ph, DS402 1Ph, DS402 3Ph, DS602 1Ph and DS602 3Ph pumps are dual-stage, rotary vane pumps oil sealed, driven by a single-phase or three-phase electric motor.

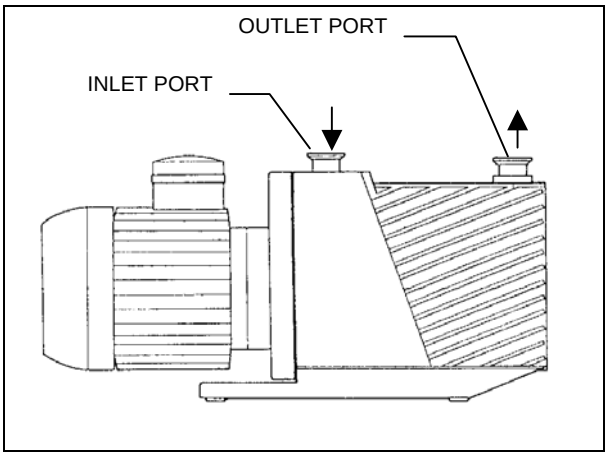

These vacuum pumps are suitable for pumping non corrosive gases.

The main features are:

- all parts in direct contact with the fluid pumped are free of copper alloys;
- all materials are carefully selected to provide extended life;
- a high capacity gas ballast device allow to pump condensable vapors;
- all the parts composing the pump are fully replaceable due to the close machining tolerances and to the centering obtained by using reference pins;
- due to its design features and low number of gaskets, the pump requires little maintenance, disassembly and reassemble are easy and require minimal time.

The pump works with force-feed lubrication, provided by an auxiliary gear-pump driven by the rotor of the vacuum pump itself. This ensures proper lubrication even when pressures are close to atmospheric.

The entire pump functional block is immersed in the oil contained in the casing. The oil guar3antees perfect sealing of the discharge valves, enters the pump to ensure lubrication and sealing of the parts inside, facilitates heat dissipation and reduces pump noise.

The pump is equipped with a special anti-suckback device which automatically isolates the vacuum system when the pump stops. This avoids rises in pressure or oil flow in the vacuum system while air is allowed back into the stator chambers.

The air entering the pump after the anti-suckback device has closed prevents the oil in the casing from filling the stator chambers.

The inner seals are achieved by the lubricating oil, thanks to the close machining tolerances.

There is only one oil seal on the rotor shaft, the one preventing oil from seeping out of the pump. This seal acts on a bushing fitted onto the shaft. Simple replacement of this seal grants the rotor a practically unlimited life (pumps DS402 1Ph, DS402 3Ph, DS602 1Ph, DS602 3Ph). On the DS102 1Ph, DS202 1Ph and DS302 1Ph pumps, this seal acts on a surface-hardened area of the shaft guaranteeing long rotor life.

The vacuum pumps are connected directly to the electric motor through a flexible coupling, so that motion is transmitted even in case of poor alignment.

A fan fitted on the joint and housed in the pump support produces a forced air flow over the finned surfaces of the casing to avoid oil overheating.

LUBRICATION

The pump's lubricating system is force-feed type.

Oil circulation is obtained by means of a gear pump connected to the rotor shaft.

The oil is drawn through a gauze filter to prevent any foreign bodies from entering the pump.

Shunt-mounted on the delivery line is a hydraulic piston which, besides actuating the anti-suckback device (see *ANTI-SUCKBACK DEVICE*), also regulates pressure by discharging excess oil flow directly into the tank.

The required flow of oil under pressure passes through ducts that are drilled in the walls of the pump and lubricates the bushings and the inside parts.

VACUUM SEALS

A special feature of this pump is the low number of gaskets that are employed.

The seals in the circuit are obtained by means of VITON gaskets.

The careful surface finish of the various parts of the pump means that vacuum sealing of the functional block is ensured by the film of oil separating metal surfaces. Sealing of the rotor shaft is guaranteed by a rotating gasket with dust-guard lip.

The suction flange and duct are sealed by mean of OR gaskets.

GAS BALLAST VALVE

When the pump sucks in vapors, these condense during compression and mix with the oil, forming an emulsion (an aqueous vapor, for example) or a solution (organic solvent vapors, for example).

A number of problems arise from this, such as the impossibility of obtaining high vacuums, the alteration of the properties of the oil, could cause scaling on parts of the pump.

To avoid this, during compression at the second stage, atmospheric air is let into the pump through an adjustable valve, or “gas ballast valve”, located at the top of the pump.

In this way, the discharge valve of the second stage opens through the effect of the atmospheric air before the partial pressure of the vapor reaches saturation point, thus preventing condensation from occurring. The vapors are expelled mixed with air.

ANTI-SUCKBACK DEVICE

The pump is equipped with a special anti-suckback device to avoid air pressure rises and/or oil backflow towards the evacuated vessel when the pump is switched off. This device has a shutter which automatically closes the suction duct.

In this way the pump and vacuum system are completely isolated from each other and air can enter the pump without any risk for the vacuum produced in the system.

The device includes some special features, namely:

- drive obtained avoiding any form of contamination of the inlet duct by fluids (oil and/or air) used to command the shutter. Thanks to this, when the pump is started again, the pump-down to vacuum conditions is extremely fast as these contaminants are not present and no degassing is therefore required;
- suction flange maintained closed even when the pump is idle, so that pollutants cannot enter from the environment and no oil can overflow from the pump.

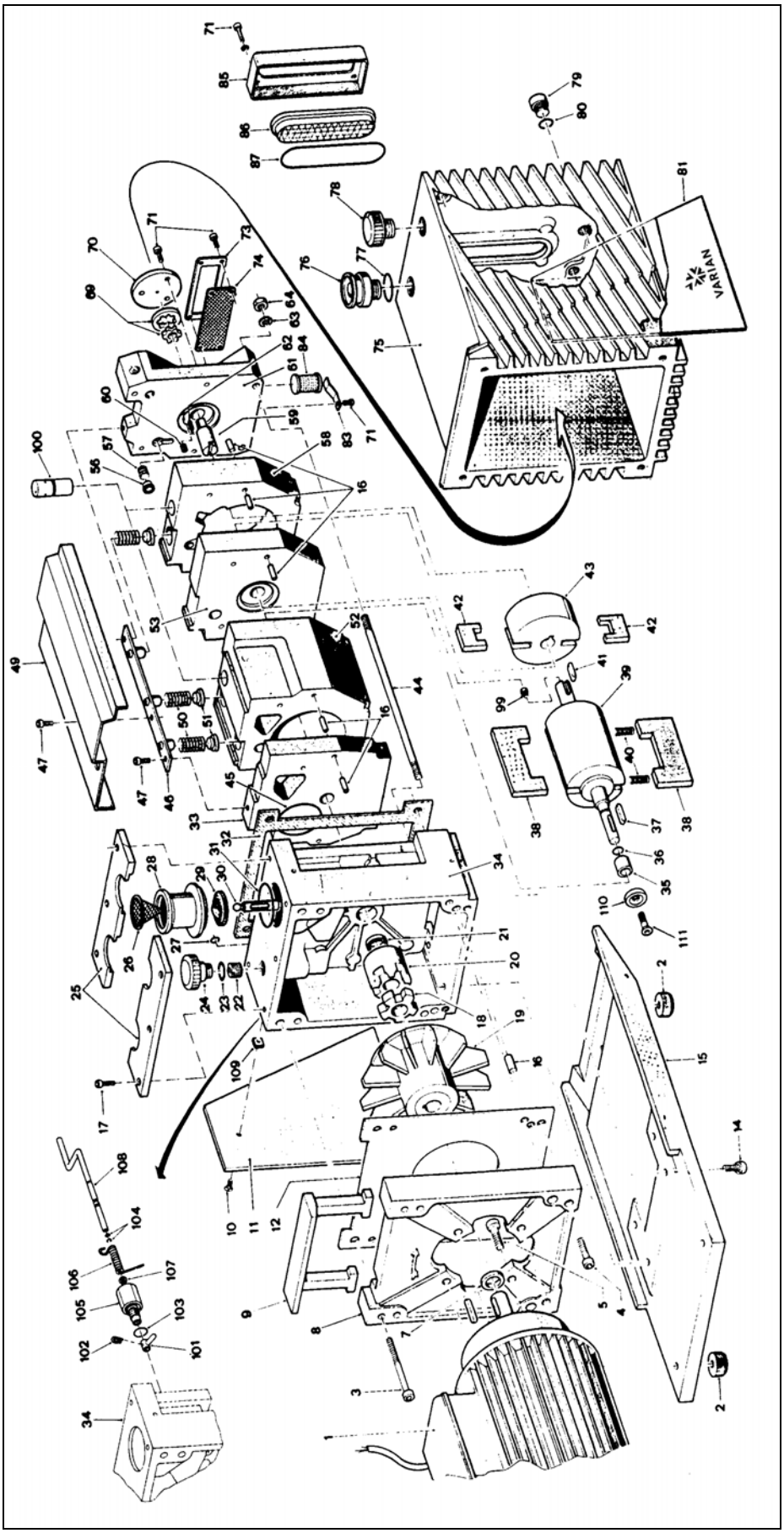

View of the pump

Legend (cf. figure *View of the pump*)

N°	Description	DS 102	DS202	DS302	DS402	DS602
1	Electric motor	SR03700702	SR03700702	SR03700702	SR03700703	SR03700703
1A	Electric motor 370-450W	SR03700865	SR03700865	SR03700865		
1B	Three phase electric motor	SR03700922	SR03700922	SR03700922	SR03700704	SR03700704
2	Rubber foot					
3	Screw					
4	Screw					
5	Screw					
7	Spacer					
8	Motor support					
9	Handle					
10	Screw					
11	Right sideplate					
12	Board					
14	Screw					
15	Support plate					
16	Cylindrical pin	(4) - (1)	(4) - (2)	(4) - (2)	(5) - (3)	(5) - (3)
17	Screw					
18	Rubber crown	(4) - (1)	(4) - (2)	(4) - (2)	(5) - (3)	(5) - (3)
19	Half-joint with fan					
20	Half-joint (pump side)					
21	Oil-seal ring	(4) - (1)	(4) - (2)	(4) - (2)	(5) - (3)	(5) - (3)
22	Special screw					
23	OR gasket	(4) - (1)	(4) - (2)	(4) - (2)	(5) - (3)	(5) - (3)
24	Gas Ballast Valve knob	SR03700219	SR03700219	SR03700219	SR03700219	SR03700219
25	Half-plate					
26	Inlet screen	SR03700237	SR03700237	SR03700237	SR03700237	SR03700237
27	OR gasket	(4) - (1)	(4) - (2)	(4) - (2)	(5) - (3)	(5) - (3)
28	Suction flange					
29	Anti-suckback shutter	(4) - (1)	(4) - (2)	(4) - (2)	(5) - (3)	(5) - (3)
30	Piston					
31	OR gasket	(4) - (1)	(4) - (2)	(4) - (2)	(5) - (3)	(5) - (3)
32	Casing gasket	(4) - (1)	(4) - (2)	(4) - (2)	(5) - (3)	(5) - (3)
33	Inner plate	SR03700260	SR03700260	SR03700260	SR03700362	SR03700362
34	Pump support					
35	Anti-wear bushing				SR03700370	SR03700370
36	OR gasket	(4) - (1)	(4) - (2)	(4) - (2)	(5) - (3)	(5) - (3)
37	Kei motor side	SR8999980101	SR8999980101	SR8999980101	SR8999980301	SR8999980301
38	First stage vane	(1)	(2)	(2)	(3)	(3)
39	First stage rotor	SR03700273	SR03700319	SR03700319	SR03700371	SR03700371
40	Spring	(4) - (1)	(4) - (2)	(4) - (2)	(5) - (3)	(5) - (3)
41	Tongue	SR8999980001	SR8999980001	SR8999980001	SR8999980401	SR8999980401
42	Second stage vane	(1)	(2)	(2)	(3)	(3)
43	Second stage rotor	SR03700269	SR03700269	SR03700269	SR03700367	SR03700367
44	Tie-rod	SR03700209	SR03700308	SR03700308	SR03700335	SR03700335
45	OR gasket	(4) - (1)	(4) - (2)	(4) - (2)	(5) - (3)	(5) - (3)
46	Bracket					
47	Screw					
49	Valve cover plate					
50	Valve spring	(4) - (1)	(4) - (2)	(4) - (2)	(5) - (3)	(5) - (3)

N°	Description	DS 102	DS202	DS302	DS402	DS602
51	Valve gasket	(4) - (1)	(4) - (2)	(4) - (2)	(5) - (3)	(5) - (3)
52	First stage stator	SR03700261	SR03700316	SR03700495	SR03700363	SR03700419
53	Middle plate	SR03700262	SR03700262	SR03700262	SR03700421	SR03700421
56	GasBallast Valve shutter	(4) - (1)	(4) - (2)	(4) - (2)	(5) - (3)	(5) - (3)
57	GasBallast Valve spring	(4) - (1)	(4) - (2)	(4) - (2)	(5) - (3)	(5) - (3)
58	Second stage stator	SR03700321	SR03700321	SR03700321	SR03700364	SR03700364
59	Oil pump joint	SR03700280	SR03700280	SR03700280	SR03700390	SR03700390
60	Special screw					
61	End plate	SR03700285	SR03700285	SR03700285	SR03700391	SR03700391
62	Tongue					
63	Washer					
64	Nut					
69A	External oil pump gear	SR03700281	SR03700281	SR03700281	SR03700281	SR03700281
69B	Internal oil pump gear	SR03700277	SR03700277	SR03700277	SR03700277	SR03700277
70	Oil pump cover					
71	Screw					
73	Plate					
74	Filter					
75	Casing					
76	Exhaust flange					
77	OR gasket	(4) - (1)	(4) - (2)	(4) - (2)	(5) - (3)	(5) - (3)
78	Oil fill plug	03.701218	03.701218	03.701218	03.701218	03.701218
79	Oil drain plug	SR03700256	SR03700256	SR03700256	SR03700256	SR03700256
80	Oil drain plug gasket	SR03700256	SR03700256	SR03700256	SR03700256	SR03700256
81	Left sideplate					
83	Spring					
84	Filter					
85	Flange					
86	Sight glass	03.701326	03.701326	03.701326	03.701326	03.701326
87	OR gasket	(4) - (1)	(4) - (2)	(4) - (2)	(5) - (3)	(5) - (3)
99	Special screw					
100	Piston					
101	Arm					
102	Spring	(1)	(2)	(2)	(3)	(3)
103	OR gasket	(4) - (1)	(4) - (2)	(4) - (2)	(5) - (3)	(5) - (3)
104	OR gasket	(4) - (1)	(4) - (2)	(4) - (2)	(5) - (3)	(5) - (3)
105	Sleeve					
106	Spring	(1)	(2)	(2)	(3)	(3)
107	Ring	(4) - (1)	(4) - (2)	(4) - (2)	(5) - (3)	(5) - (3)
108	Arm					
109	Insert					
110	Special washer					
111	Screw					

NOTES

(1) Part of DS 102 Major Maintenance Kit (P/N 9499380)

(2) Part of DS 202-302 Major Maintenance Kit (P/N9499381)

(3) Part of DS 402-602 Major Maintenance Kit (P/N 9499382)

(4) Part of DS 102-202-302 Minor Maintenance Kit (P/N 9499370)

(5) Part of DS 402-602 Minor Maintenance Kit (P/N 9499371)

TECHNICAL DATA

The following table lists the main technical data of the DS102 1Ph, DS202 1Ph, DS302 1Ph, DS402 1Ph, DS402 3Ph, DS602 1Ph and DS602 3Ph pumps.

TECHNICAL DATA	Hz	UNITS	DS102	DS202	DS302	DS402	DS602
FREE AIR DISPLACEMENT	60	l/min (cfm)	114 (4)	192 (6,8)	285 (10)	410 (14,5)	605 (21,4)
	50	l/min (m^3/h)	95 (5,7)	160 (9,6)	237 (14,2)	342 (20,5)	540 (30,2)
PUMPING SPEED *	60	cfm	3,5	5,8	8,2	12,3	18,3
	50	m^3/h	5	8,3	11,6	17,4	26
ULTIMATE PARTIAL PRESSURE *		mbar	10^{-4}	10^{-4}	10^{-4}	10^{-4}	10^{-4}
ULTIMATE TOTAL PRESSURE *		mbar	$2{\cdot}10^{-3}$	$2{\cdot}10^{-3}$	$2{\cdot}10^{-3}$	$2{\cdot}10^{-3}$	$2{\cdot}10^{-3}$
ULTIMATE TOTAL PRESSURE WITH GAS BALLAST *		mbar	$2{\cdot}10^{-2}$	$2{\cdot}10^{-2}$	$2{\cdot}10^{-2}$	$1{\cdot}10^{-2}$	$1{\cdot}10^{-2}$
WATER VAPOR TOLERANCE		mbar	15	15	20	30	30
WATER VAPOR CAPACITY		g/h	60	100	160	350	550
OIL CAPACITY min/max		l	0,3/0,5	0,4/0,6	0,4/0,6	0,6/1	0,6/1
MOTOR RATING 1ph	50/60	kW	0,45/0,55	0,45/0,55	0,45/0,55	0,75/0,90	0,75/0,90
MOTOR RATING 3ph	50/60	kW				0,75/0,90	0,75/0,90
NOMINAL ROTATION SPEED	50	rpm	1500	1500	1500	1500	1500
	60	rpm	1800	1800	1800	1800	1800
OIL TEMPERATURE		°C	50	50	52	70	72
(pump operating) **		°F	122	122	126	158	162
Installation category	II						
Pollution degree	2						
OPERATING TEMPERATURE RANGE		°C	12 - 40	12 - 40	12 - 40	12 - 40	12 - 40
WEIGHT		Kg	22	24	24	36	36
		lb	48	53	53	79	79
INLET FLANGE		DN	25KF	25KF	25KF	25KF	25KF
EXHAUST FLANGE		DN	25KF	25KF	25KF	25KF	25KF
Dimensions (cf. also next table):							
- length, 1ph		mm	454	491	491	530	530
- width		mm	134	134	134	164	164
- height		mm	212	212	212	242	242
Input single phase versions ***							
Nominal voltages:	50	V	100 200-240	100 200-240	100 200-240	100 200-240	100 200-240
	60	V	100-120 200-230	100-120 200-230	100-120 200-230	100-120 200-230	100-120 200-230
Maximum currents:	50	A	8,8 5,4	8,8 5,4	8,8 5,4	11,8 6,2	11,8 6,2
	60	A	8,8 4,4	8,8 4,4	8,8 4,4	12,8 6,4	1,8 6,4

* According to PNEUROP 6602

** At ultimate total pressure, 20 °C (68 °F) room temperature

*** For more details about the electrical motors see pages from 17 to 20

DIMENSIONS

MODEL	UNITS	A	B	C	D	H	L	M	N	P	R	W
DS102	mm	30	30	35	3	212	430	250	100	105	165	132
	inch	1,18	1,18	1,38	0,12	8,3	16,9	9,8	3,9	4,1	6,5	5,2
DS202	mm	30	30	35	3	212	467	250	100	105	205	132
	inch	1,18	1,18	1,38	0,12	8,3	18,4	9,8	3,9	4,1	8,1	5,2
DS302	mm	30	30	35	3	212	467	250	100	105	205	132
	inch	1,18	1,18	1,38	0,12	8,3	18,4	9,8	3,9	4,1	8,1	5,2
DS402	mm	40	40	40	6	242	541	261	130	100	230	164
	inch	1,57	1,57	1,57	0,24	9,5	21,3	10,3	5,1	3,9	9,1	6,5
DS602	mm	40	40	40	6	242	541	261	130	100	230	164
	inch	1,57	1,57	1,57	0,24	9,5	21,3	10,3	5,1	3,9	9,1	6,5

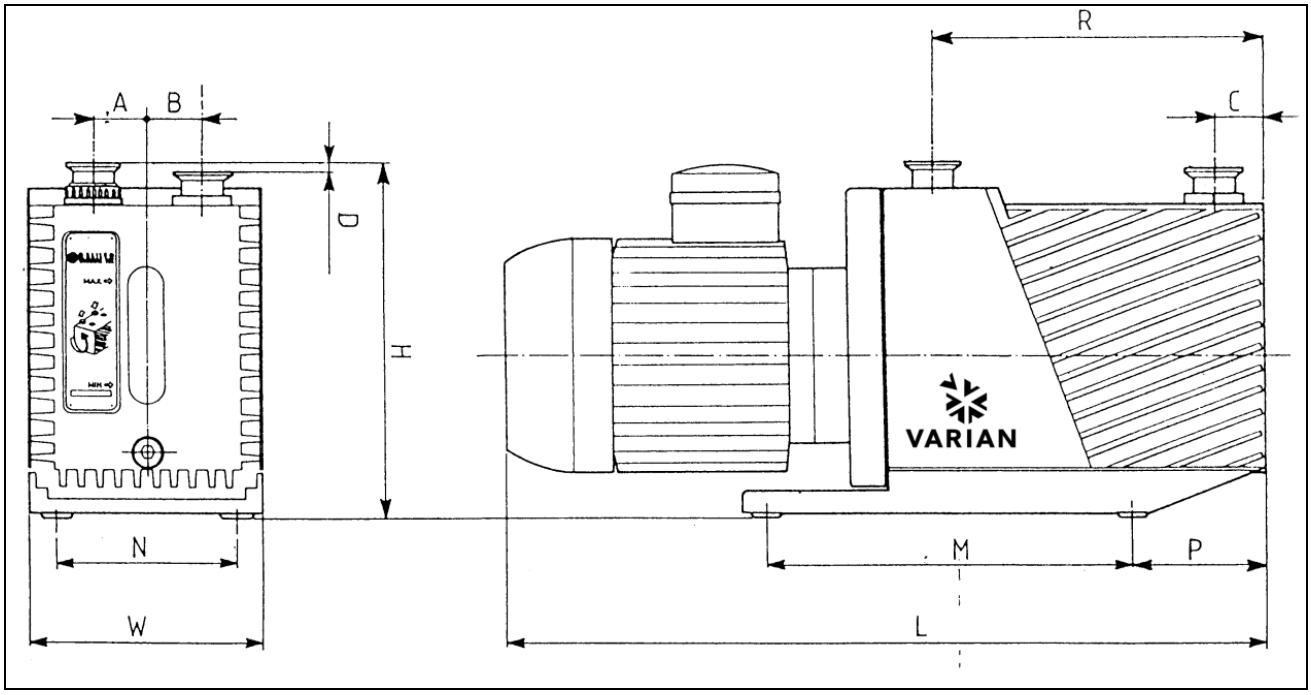

Pump dimensions

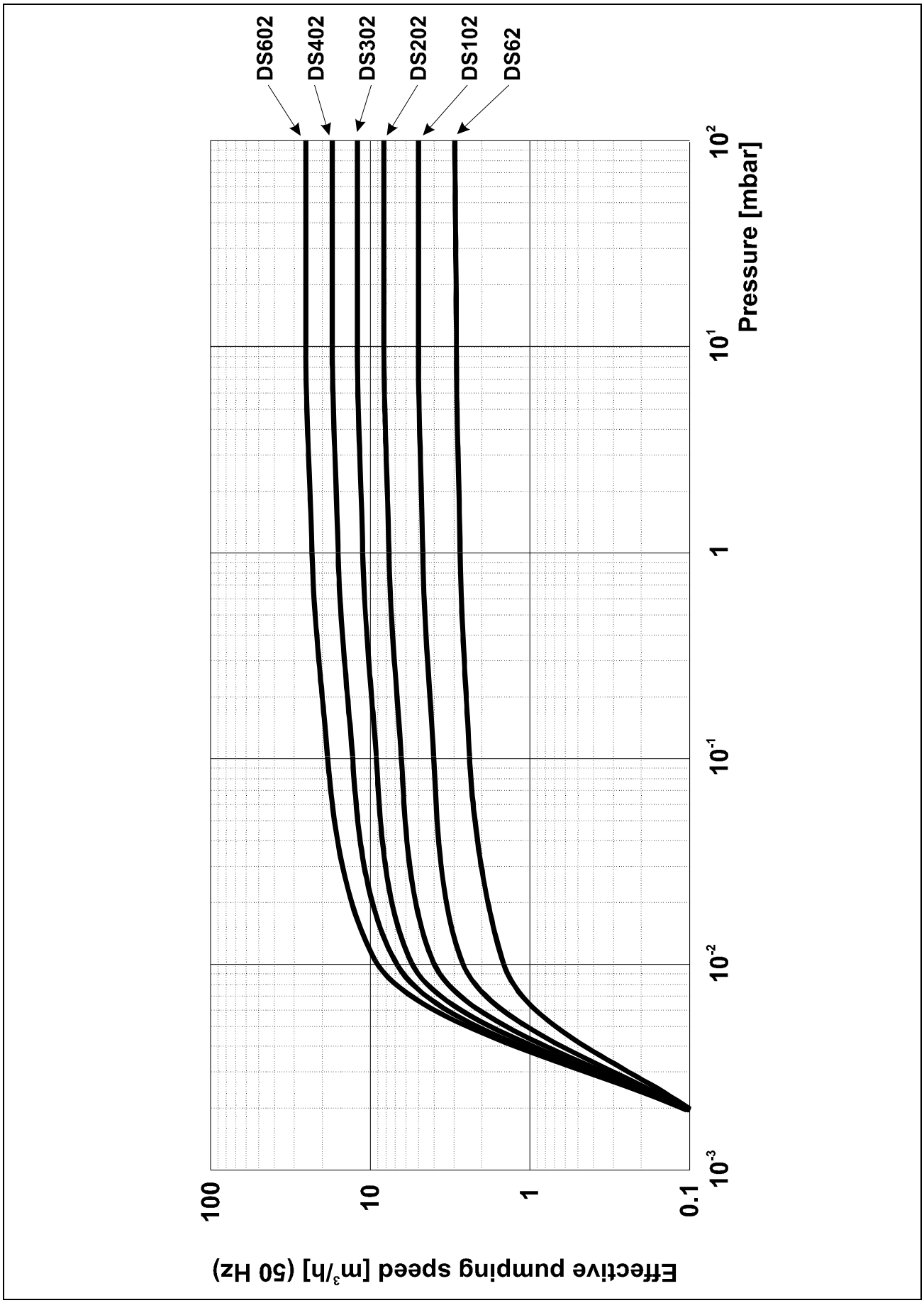

Typical Performance Curves

SAFETY PRECAUTIONS

- Always carry the pump by means of the handles provided.
- The pump must be set in position taking the upmost care in order to avoid accidental falls.

WARNING!

In case of a need to handle the pump after a period of operation, it must be left to cool first as the external surface temperature may be in excess of 60 °C.

TRANSPORT AND INSTALLATION

The pumps are shipped to the customer inside cardboard boxes.

Total weight of the pack, including the pump, is between 30 Kg. and 40 Kg. according to the different pump models.

The case must be handled with care, using appropriate lifting equipment.

CAUTION

When moving the case, ensure that it is securely bound to the lifting equipment and that the equipment is strong enough to support the weight.

The pump's working environment is a traditional industrial environment. Naturally sites with corrosive vapors or excessive heat are best avoided.

Room temperature should ideally be between 12 °C and 40 °C.

If the temperature is not inside this range, consult Varian technical service for the changes required.

Setting the pump in position should be performed as follows:

- Pump laid on the ground. There are no special instructions for this type of installation, except that the floor should be as flat as possible and suited to bear the weight of the pump (it should ideally be a concrete floor) and of any accessories mounted on it. Note that the pump is stable on its base plate and it should not be necessary to anchor it to the floor with bolts and screws; also vibrations to and from the pump are greatly reduced by the use of rubber feet.
- Pump off the ground. In this case, the user must design a suitable support structure, remembering the following points:
  * the plane supporting the pump must be perfectly horizontal;
  * the structure should be adequately rigid;
  * the relevant safety precautions should be applied.

  Note also that the pump should be attached to the supporting structure after replacing the rubber feet with special anti-vibration feet, which should be screwed to the pump base and to the supporting plane.

After taking the pump out of its packing case, you are advised to make the following checks:

a. Ensure that the pump has not suffered any damage during shipping.

b. Check that the guards are mounted correctly (side plates, refs. 11 and 81 in fig. *View of the pump*) and that there are no uncovered or loose parts.

PRELIMINARY OPERATIONS

Before starting the pump, fill up with lubricating oil as the pumps are delivered empty.

NOTE

A tin of oil is included in the packing.

For details on how to fill up, see Scheduled Maintenance Card 01.

CAUTION

Oil must be poured into the casing through the special threaded plughole and NOT through the suction line.

WARNING!

Take out the protective caps on the suction and exhaust flanges before doing anything else. In the event of an accidental start-up, the air inside the pump could violently expel the protective caps and harm the operator.

SECTION II

ELECTRICAL MOTORS

Single phase universal motors

They are world wide motors, dual voltages and dual frequencies, and they are in accordance with major international standards (UL, CSA, CE). On the table below are shown the technical specifications of the different motors.

☞ **CAUTION**

Before connecting to the mains, check the position of the voltage selector situated inside the electrical box (see next paragraph).

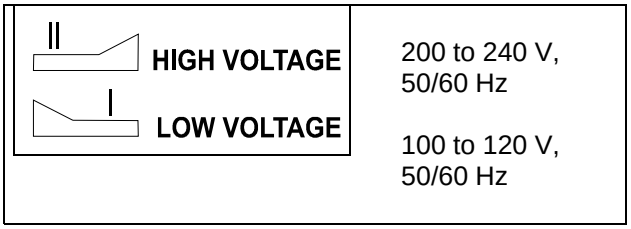

Voltage selector

The motor has a main on/off bipolar switch.

The motor includes a thermal protection against overloads. If the motor is switched off by this relay, it can be started again after a few minutes.

Consult the trouble shooting section in order to understand and remove the overload cause.

NOTE

If fuses are installed on the power line, they must be in accordance with the table below.

If you start a pump at low temperature, the current absorbed by the motors will be for several seconds higher than the nominal one, for this reason the fuse on the line must be of the slow-blow type.

Motor specifications for different pumps

PUMP	NOMINAL VOLTAGE [V]	Hz	RPM	kW	START UP CURRENT [A]	FULL LOAD CURRENT [A]	MAXIMUM FUSE RATING [A]
DS 102 DS 202 DS 302	100	50	1450	0.45	44	8.8	12
	100 to 120	60	1730	0.55	42	8.8	12
	200 to 240	50	1450	0.45	27	5.4	8
	200 to 230	60	1730	0.55	24	4.4	6
DS 402 DS 602	100	50	1450	0.75	75	11.8	16
	100 to 120	60	1730	0.90	82	12.8	16
	200 to 240	50	1450	0.75	43	6.2	8
	200 to 230	60	1730	0.90	39	6.4	8

Single-Phase Universal Motors Voltage Setting

CAUTION

Before connecting to the mains, check that your electrical mains voltage corresponds to the motor voltage setting.

WARNING!

Disconnect the motor from the mains before opening the electrical box.

The motors are factory set to operate at 200-240 V (50/60 Hz) nominal voltages.

To modify the voltage setting, change the position of the voltage selector situated inside the motor electrical box.

To confirm the change of the voltage setting from High Voltage to Low Voltage, glow the orange label above the yellow label positioned on the electrical box cover.

WARNING!

Close the motor electrical box cover before connecting to the main.

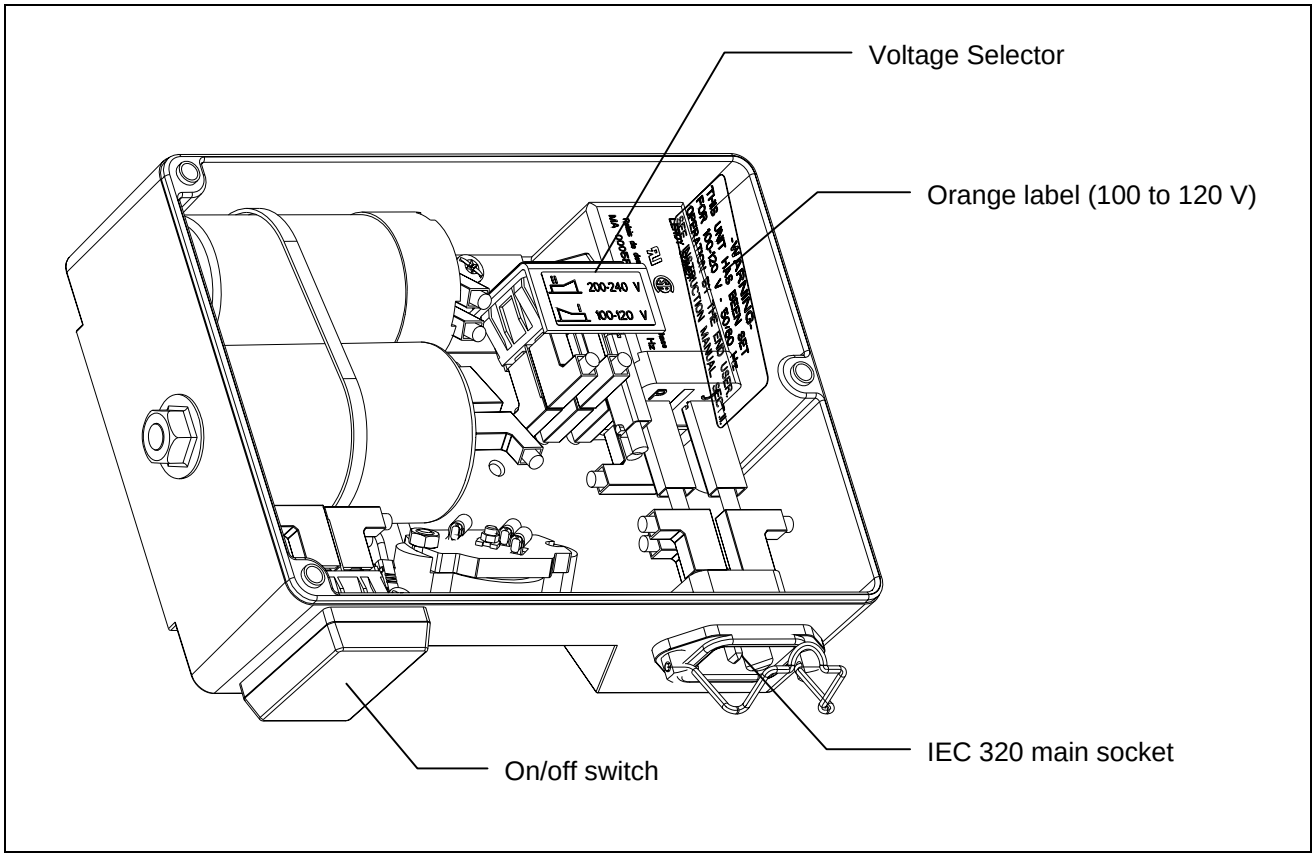

Motor Electrical box

Three phase universal motors

They are world wide motors in accordance with major international standards (UL, CSA, CE). On the table below are shown the technical specifications of the different motors.

☞ **CAUTION**

Before starting the pump, give a short activation to the power switch, in order to check that the motor turns in the direction indicated by the arrow on the motor body. Should it rotate in the opposite direction, invert the connection of any two phases on the motor terminals.

LOW VOLTAGE CONNECTION
for power supply of 220V to 230 V
50 - 60 Hz
DELTA CONNECTION

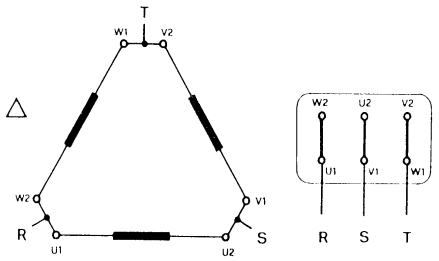

HIGH VOLTAGE CONNECTION
for power supply 380V to 460V
50 - 60 Hz
STAR CONNECTION

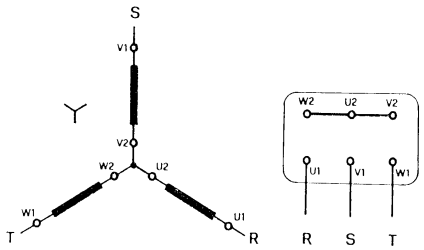

Electrical Connections of Three-Phase World Wide Motors

To connect the motor to the three-phase mains, follow the wiring diagram on the motor plate or on the inside of the terminal strip.

Install a multipolar switch on the power line, with contact spacing of at least 3 mm. A magneto-thermal switch must be installed downstream of this switch, tripping at 130-140 % of the nominal current.

CONNECTION	FREQ. [Hz]	NOMINAL VOLTAGES [V]	POWER [KW]	START UP CURRENT [A]	CURRENT [A]	MAX FUSE RATING [A]
STAR	50	380 to 415	0.75	15	2.6	4
STAR	60	460	0.90	14	2.4	4
DELTA	50	200 to 240	0.75	26	4.4	6
DELTA	60	200 to 230	0.90	21	4.8	6

CAUTION

It is recommended to connect the pump to the power supply through a dedicated switch on the main electrical panel of the installation, or in proximity of the power supply connection point.

Before starting the pump, give a short activation to the power switch, in order to check that the motor turns in the direction indicated by the arrow on the motor body. Should it rotate in the opposite direction, invert the connection of any two phases on the motor terminals.

One of the most effective method to verify the rotational way of the motor, it is to start the pump with a sheet of paper on the pump inlet. If the paper is sucked by the pump then the motor runs in the right way.

CONNECTIONS TO THE INLET AND EXHAUST FLANGES

Remove the protective caps from both flanges. Connect the system to be evacuated to the inlet flange, using a centering ring with OR and a locking collar.

NOTE

For guaranteed reliable sealing, use an OR gasket in Perbunan or Viton.

The inlet duct is equipped with a sieve filter preventing solid particles from entering and damaging the pump.

NOTE

When the gases to be pumped out contain dust, it is advisable to insert a dust filter before the inlet flange.

NOTE

When the gases to be pumped out contain large quantities of vapor, it is advisable to include a condense separator before the inlet flange.

To make best use of the pump's capacity, use only short, straight piping, with a diameter not smaller than that of the inlet flange.

NOTE

If rigid piping is used, it is good practice to use a flexible joint in order to avoid undue forcing of the connection on the pump.

The exhaust duct must be connected to a pipe that will take away the pumped out gases.

NOTE

Application of an oil trap filter is necessary to avoid pollution of the surrounding atmosphere by the oil present in the exhaust duct during pump operation.

CAUTION

Never block the pump exhaust line. This would cause overpressure in the casing with the risk of breaking the glass window of the level indicator and/or expelling the oil seal gasket.

STARTING AND RUNNING THE PUMP

Before being put into service, in order to reach maximum vacuum, the pump must be left running for about an hour with the gas ballast valve open. This will eliminate any humidity from the oil.

WARNING!

The pump is designed for operation with neutral or non-corrosive fluids. It is absolutely forbidden to use potentially explosive or flammable substances.

NOTE

If the pump is started with cold oil, initially more than normal noise will be heard; this will last for a few minutes only until the oil reaches its working temperature.

There are no special instructions for normal operation of the pump, which is delivered to you after completion of a running-in cycle in the factory. The maintenance operations for a pump in working condition may be found on the Scheduled Maintenance Cards.

If the pump is sucking in environments with liquids or vapors, it is important to leave it to run with the gas ballast open so as to avoid condensation of the vapors and contamination of the lubricating oil as a result. When there is no danger of the oil being contaminated, the gas ballast valve should be closed to reduce the pump's power absorption.

The gas ballast valve will prove useful in the cold season when, due to the lower room temperatures, it takes longer for the pump to reach rated temperature when switched on. Compression of the air forced in by the gas ballast valve develops heat, which in turn increases temperature of the oil faster.

NOTE

If gases without vapors are sucked in, you are advised to open the gas ballast device from time to time in order to eliminate the traces of humidity they contain.

NOTE

For repetitive work cycles, with brief time intervals in between, it is better not to stop the pump.

STOPPING THE PUMP

There are no special procedures for switching the pump off; it needs only to be disconnected from the electric power by means of the bipolar switch (version with single-phase motor - see section *MODELS WITH SINGLE-PHASE UNIVERSAL MOTORS*) or of the multipolar switch (version with three-phase motor - see section *MODELS WITH THREE-PHASE UNIVERSAL MOTORS*).

When the pump is stopped, the anti-suckback device makes it possible to maintain vacuum in the vessel connected on the inlet flange of the pump.

If the pump is expected to be stopped for a lengthy period, or in any case if it has pumped in large amounts of vapors, it is good practice to run it with the gas ballast open and the inlet line closed for a few minutes before switching off in order to limit the risk of corrosion or scaling due to pollution of the oil by condensed vapors.

SAFETY RULES

Personnel responsible for pump operation and maintenance must be well-trained and must be aware of the accident prevention rules.

The accident prevention precautions contained in this section must be respected at all times during operation and maintenance of the pump to avoid damage to operators and to the pump.

These precautions are provided in the form of WARNING and CAUTION notes.

WARNING!

Operating procedures, technical information and precautions which, if not respected and/or implemented correctly may cause body harm to operators.

CAUTION

Operating procedures, technical information and precautions which, if not respected and/or implemented correctly may cause damage to the pump.

WARNING NOTES

a. Death may result from contact with high voltages. Always take extreme care and observe the accident prevention regulations in force.

b. Always disconnect the power supply to the pump before maintenance work. Place a special warning signs over the power supply breaker switch: MACHINE UNDERGOING MAINTENANCE - DO NOT POWER ON.

c. If you are performing maintenance after the pump has been operating for a considerable time, allow sufficient time for it to cool as the external surface temperature may be in excess of 60 °C.

d. Failure to provide the pump with an earth connection may cause serious damage to operators. Always ensure that there is an earth connection and that it complies with the standards.

e. When cleaning the pump and its component parts, avoid the use of flammable or toxic solvents, such as benzin, benzol, ether or alcohol. The recommendation is to use a soap and water solution, preferably in ultrasound washing machines, taking care to dry all the cleaned parts at temperatures under 100 °C in order to eliminate residual moisture.

f. Prolonged overloads or breakdowns may cause the electric motor to overheat, and to release noxious smoke; remove the power immediately as a precaution and do not approach the pump at least until you have provided ventilation to drive out the smoke. Take care not to breathe in the fumes remaining inside the pump in the course of repair work.

g. In case of fire, do not throw water on the pump. Switch the power off and use CO_2 extinguishers.

h. Carefully inspect the flanges to ensure that there are no dust, oil, dirt or defects of the mating surfaces, before making the required connections.

i. Ensure that all joints and couplings are locked correctly before starting the pump again after repair work.

j. Do not wear any objects that may become entangled in the mechanisms and/or act as conductors (chains, bracelets, etc.).

k. Ensure that the tools to be used are in perfect working condition and have insulating grips, where necessary. Check that the insulating material of the cables and that the conductors of the test equipment do not show any signs of damage.

l. Do not replace the oil immediately after stopping the machine as the oil may still be at high temperature.

m. Perform repairs in clean and, where possible, dust-free areas. Protect all the clearances of connection points with suitable plastic caps and cover the machined surface areas of all parts stripped down until they are put back on the pump again.

n. Do not start the pump if the protective side-plates (refs. 11 and 81 of fig. *View of the pump*) are not properly in place.

CAUTION NOTES ☞

a. Before putting the pump back into operation after a breakdown, inspect it and check carefully for any other signs of damage.

b. Use only tools that are in perfect working order and specially designed for the job; use of inappropriate or ineffective tools may cause serious damage.

c. Perform repairs in clean and, where possible, dust-free areas. Protect all the clearances of connection points with suitable plastic caps and cover the machined surface areas of all parts stripped down until they are put back on the pump again.

d. Always check the lubricant and that it is properly distributed through the pump; inadequate lubrication may damage the pump seriously.

e. Give the parts some form of marking as you strip them down to ensure that you reassemble them again in the proper order.

f. Check that there are no scratches or grooves on the machined shafts, in their seats inside the pump or on machine-ground surfaces. Slight scratches and abrasions may be eliminated with very fine emery paper or by a little light grinding.

g. Before putting a group together, always spread a little oil over inner parts and mating surfaces. Replace all seals with original spare parts before reassembling components.

MAINTENANCE ACTIONS

Maintenance may be seen as the totality of all scheduled and unscheduled maintenance work.

Maintenance includes:

1. **SCHEDULED MAINTENANCE:** Maintaining the nominal state of operation.

2. **UNSCHEDULED MAINTENANCE:** Restoring the nominal state of operation

NOTE

The frequency with which repairs are performed depends on the process and presence of substances that shorten pump life (dust, abrasives, solvents, water, chemically aggressive substances).

The pump must be cleaned at regular intervals of time.

☞ **CAUTION**

Do not clean with Alcohol the plastic or rubber components of the pump.

Use only the strictly necessary amount of lubricant; an excess of lubricating oil, like when there is none, may sometimes compromise proper operation of the pump.

Only the recommended lubricants, or lubricating oils with similar characteristics and known and experimented quality, should be used.

Oil changes must be made with the oil at a sufficiently high temperature, after leaving the pump to cool for a few minutes following operation.

The drain and filler plugs must not be left open any longer than is strictly necessary.

When performing maintenance, look out for all signals that may precede a breakdown, in particular:

- traces of corrosion;
- oil leaks;
- slack joints or couplings.

Maintenance technicians must:

- be aware of all applicable national directives concerning accident prevention during work on motor-driven pumps and should know how to apply them;
- have read and understood all the sections on “Safety Rules";
- be familiar with the essential design features and operation of the pump;
- know how to use and consult the pump documentation;
- be concerned about proper operation of the pump;
- make a note of any irregularities in operation of the pump and take the necessary action, where appropriate.

Use original spare parts wherever possible and repair a broken part as best as possible on site or send it back to the manufacturer for repairs.

For all problems arising, or to order spare parts, refer to our service department.

Varian S.p.A. - Vacuum Technologies
Via Varian 54
10040 Leinì (Torino) - Italy
Telephone: (39) 011.9979111
Fax: (39) 011.9979344

LUBRICANTS

It will be readily understood how important adequate lubrication is to high technology pumps like the Varian vacuum pumps. Correct use of appropriate lubricants makes a significant contribution to achieving best performance and warding off defects.

When handling lubricants, the following sanitary protection measures should be observed at all times:

- Avoid prolonged, excessive or repeated contact of the skin with products for lubrication, and also avoid directly inhaling the fumes or vapors of such products.
- Protect the skin by wearing appropriate clothes and equipment (e.g. special suits, glasses or, where permitted by the safety regulations, gloves) or by applying a special protective product.
- Clean the skin carefully after contact with the lubricants by washing freely with water and soap.
- Apply a skin cream after washing.
- Take off and change clothes or shoes on which oil has been spilled.
- Never put rags dripping with oil into the pockets of your clothes.

When disposing of waste lubricants, observe the following environment protection regulations:

- The lubricants risk contaminating the water and the ground! Therefore never pour lubricating products on to the ground, into water or in the sewage system. All violations of these rules are liable to persecution as provided for by law. When using lubricants always keep an oil can nearby.
- Take care in draining off waste oils. In disposal of these products respect all regulations in force concerning waste oil disposal.

The recommended lubricating oil is the Varian GP oil. The GP oil is a general purpose mechanical pump fluid specifically engineered to provide superior performance in high speed direct drive mechanical pumps.

These precisely distilled fluids (100% solvent refined neutral paraffinic oil) deliver lower base pressure capability, faster pump-down cycles, and reduced maintenance requirements on both the pump and the fluid.

It is absolutely necessary to continue using the lubricants initially used to fill the tank. If this is not possible for organizational or business reasons, use only products with the same characteristics as the previous oils.

Only use of lubricants of suitable quality will guarantee safe operation of the pumps.

☞ **CAUTION**

Mineral oils and the PFPE oil are incompatible. To change from one type to another, the pump must be stripped down completely and all parts washed carefully to eliminate all oil residues.

If you expect to have to use other lubricants, first find out if the two products are compatible. In cases of doubt, the lubricant used up to that time must be flushed out by way of a pump flushing procedure.

☞ **CAUTION**

To avoid the risk of contaminating the oil, absolute cleanliness of the pump and surrounding area must be ensured during the lubrication procedures.

Varian GP oil characteristics

PROPERTY	UNIT OF MEASURE	GP oil
Vapor pressure @ 25 °C		$1 \cdot 10^{-5}$
Boiling point @ 0,01 torr	°C	112
Viscosity @ 40 °C	cSt (SUS)	55 (258)
Viscosity @ 100 °C	cSt (SUS)	8,1 (52,7)
Viscosity index		119
Pour point	°C (°F)	-15 (5)
Flash point	°C (°F)	213 (415)
Fire point	°C (°F)	244 (472)
Density	g/cm^3	0,87

Varian GP oil vapor pressure curve

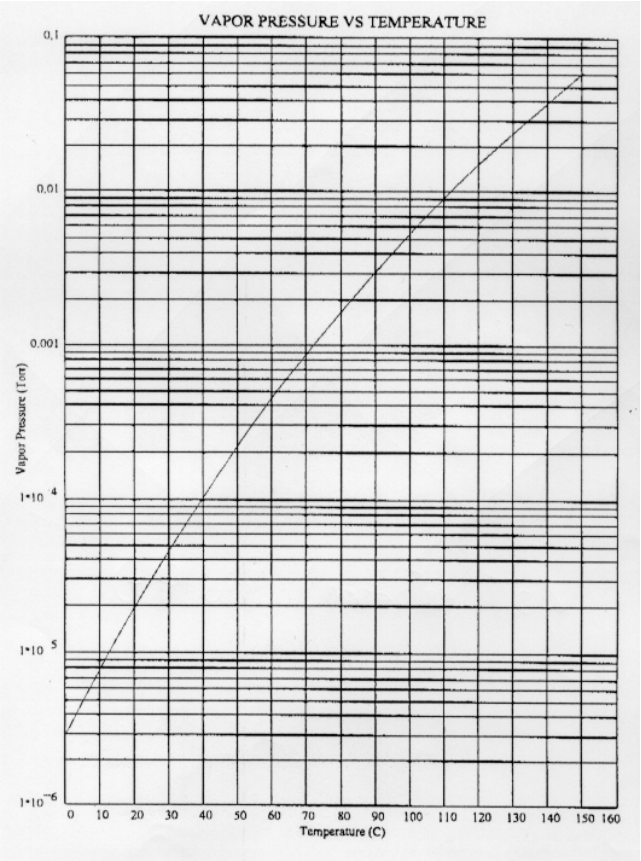

Varian GP oil viscosity curve

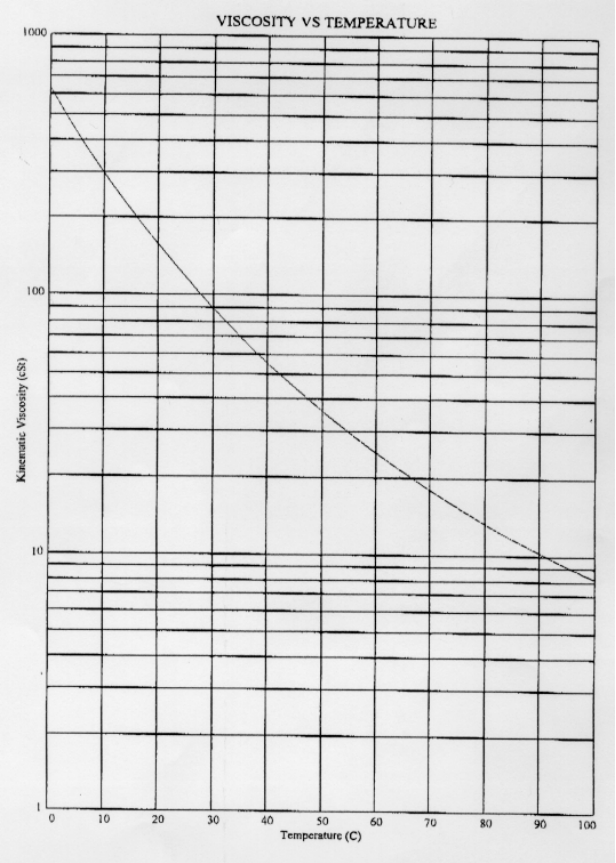

SCHEDULED MAINTENANCE CARDS

No.	FREQUENCY	PUMP STATUS (*)	OPERATION
01	MONTHLY	R	OIL LEVEL CHECKING
02	TWICE YEARLY	S	CLEANING THE INLET FILTER

(*) R=RUNNING S=STOPPED

NOTE

When the pump is equipped with:

- *a filter for dust on the inlet side*
- *a condensation separator on the inlet side*
  these items must also be maintained, by following the Manufacturer's instructions.

NOTE

The numbers used in the drawings on the Scheduled Maintenance Cards are those used in Figure View of the pump*.*

VARIAN vacuum technologies	**Scheduled Maintenance**	**Card No.** **01**

Pump type:	DS102 1Ph, DS202 1Ph, DS302 1Ph, DS402 1Ph, DS402 3Ph, DS602 1Ph, DS602 3Ph

Frequency:	MONTHLY	**Time:**	5 min.	**Machine status:**	**S** **R**

Type of action:	LUBRIFICATION
Item:	LUBRIFICATING OIL

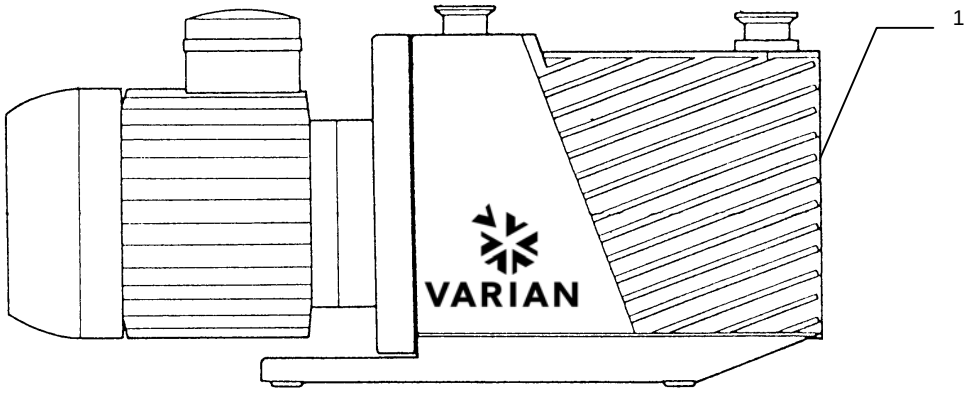

No.	Description	Time	Equipment	Materials
1	Check the oil level and top up if necessary.	5 min	• Cleaning rags • Liquid detergent	Oil

WARNING!

Machine powered: take care on account of moving parts and high voltages.

WARNING!

If you have to perform maintenance on the pump after a considerable time in operation, leave it to cool as temperature of the outer surface may be in excess of 60°C.

1. Check the oil level through the sight glass: there are two clearly visible arrows indicating maximum and minimum levels for proper pump operation.

NOTE

The amount of oil consumed depends on the type of work, particularly on the volume being evacuated and on the frequency of the vacuum cycles.

2. If necessary, open the pump filling plug on the top plane of the pump and add oil.

NOTE

Before starting the procedure, check that the quality and type of oil used corresponds to the indications of Table Varian GP oil characteristics *of this manual.*

☞ **CAUTION**

Take great care to avoid oily residues or dust from entering the pump and jeopardizing proper operation.

3. Close the fill plug and, using cotton or other suitable material rags, clean thoroughly the outer surface of the top plane of the pump.

☞ **CAUTION**

Never mix lubricants of different brands or quality. To change from one oil to another, the pump must be stripped down and all parts washed carefully, taking care to eliminate oil residues.

4. Open the gas ballast valve to purify the oil.

VARIAN vacuum technologies	**Scheduled Maintenance**	**Card No.** 02

Pump type:	DS102 1Ph, DS202 1Ph, DS302 1Ph, DS402 1Ph, DS402 3Ph, DS602 1Ph, DS602 3Ph

Frequency:	TWICE YEARLY	**Time:**	10 min.	**Machine status:**	**S** **R**

Type of action:	CLEANING
Item:	INLET FILTER

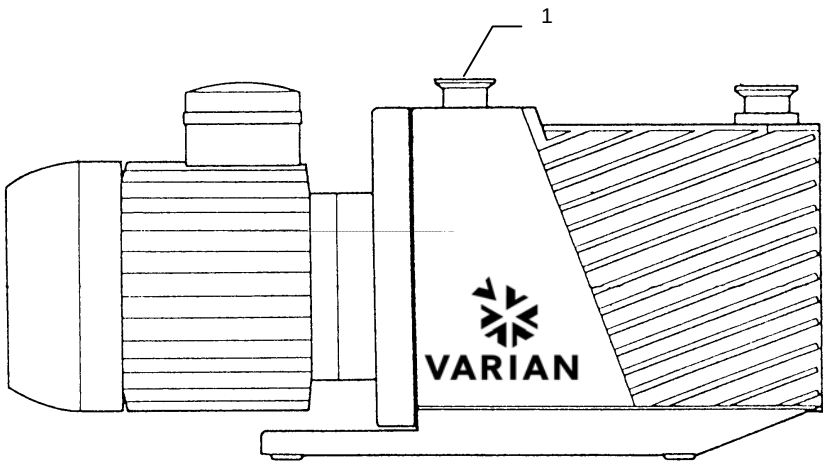

No.	Description	Time	Equipment	Materials
1	Clean the suction filter.	10 min.	• Compressed air gun	

WARNING!

Machine safety: disconnect all power lines. Hang the card “MACHINE UNDERGOING MAINTENANCE - DO NOT POWER ON” from the main breaker switch. When finished, remove the safety warning.

WARNING!

If you have to perform maintenance on the pump after a considerable time in operation, leave it to cool as temperature of the outer surface may be in excess of 60 °C.

1. Remove the filter (26) from the inlet flange (28).
2. Clean the filter using an aqueous solution and dry with hot air.
3. Put the filter back in place.

☞ **CAUTION**

The filter element is designed to prevent solid particles in the air from entering the inside of the pump and if it is not working properly, serious damage could be caused the pump's inner parts. In such cases, it may be worthwhile installing a large surface area filter in the pump's suction line to improve effectiveness and reduce maintenance frequency.
If the pump sucks in gases and vapors that contain large quantities of solid particles, the filter must be checked and cleaned more often than indicated here.

UNSCHEDULED MAINTENANCE CARDS

No.	SUBJECT	FREQUENCY
101	General Warnings	
102	Changing the oil	Whenever necessary
103	Disassembly of oil level indicator	When damaged
104	Disassembly of anti-suckback device shutter	When damaged
105	Disassembly of electric motor and joint	When damaged
106	Disassembly of discharge valve	When damaged
107	Disassembly of oil circulating pump	When damaged
108	Disassembly of anti-suckback valve	When damaged
109	Disassembly of pump body	When damaged
110	Replacement of oil seal ring/wear bushing	When damaged
111	Disassembly of functional block rotors	When damaged

NOTE

The numbers used in the drawings on the Unscheduled Maintenance Cards are those used in Figure View of the pump.

VARIAN vacuum technologies	**Unscheduled Maintenance**	**Card No.** **101**

Pump type:	DS102 1Ph, DS202 1Ph, DS302 1Ph, DS402 1Ph, DS402 3Ph, DS602 1Ph, DS602 3Ph

Frequency:		**Time:**		**Machine status:**	

Type of action:	GENERAL WARNINGS
Item:	

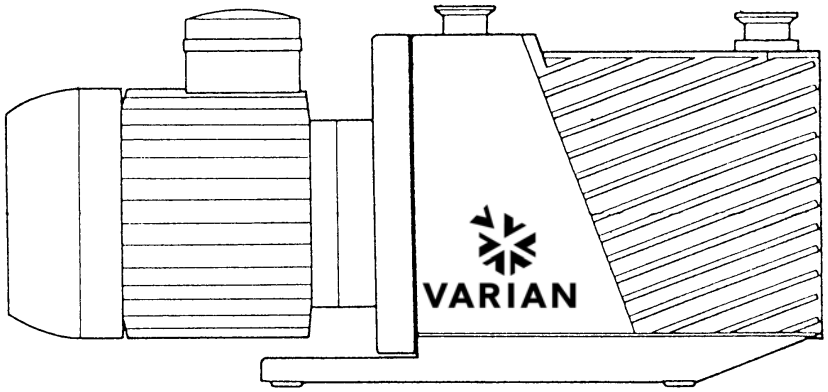

1. Pump disassembly and reassembly require some basic operations and use of tools found in most workshops.

NOTE

The pump's component parts are modular and therefore fully interchangeable. Whenever parts have to replaced, please specify in the order:

- *Pump type*
- *Serial number (marked on pump identification plate).*
- *Reference number on the detailed diagram, name and part number as indicated on the spare parts and accessories list (section* SPARE PARTS LIST *of this manual).*

To simplify maintenance work, two kits have been devised.

The Gaskets Kit, containing all the gaskets recommended for substitution after disassembly of the pump and the most commonly used removable parts.

You are advised to keep this kit in a dry room, away from heat and light (sun and UV rays) in order to prevent hardening of the elastomer parts.

The Maintenance Kit, including, as well as the Gaskets Kit, the 1st and 2nd stage vanes and other parts that it may be necessary to replace when overhauling the pump completely. These parts have a life of approx. two years under conditions of normal operation.

KIT	PUMP TYPE					ORDER CODE
	DS102 1Ph	DS202 1Ph	DS302 1Ph	DS402 1Ph DS402 3Ph	DS602 1Ph DS602 3Ph	
GASKETS KIT	X	X	X			949-9370
GASKETS KIT				X	X	949-9371
MAINTENANCE KIT	X					949-9380
MAINTENANCE KIT		X	X			949-9381
MAINTENANCE KIT				X	X	949-9382

2. Before reassembling the pump, all parts must be cleaned thoroughly with a soap and water solution and rinsed with demineralized water.

☞ **CAUTION**

Particular care must be taken in cleaning the lubrication ducts and oil passage nozzles, which must always be kept free of impurities.

☞ **CAUTION**

Take care that the soap and water solution does not remain in the various cavities and recesses of the pump, in the blind holes in particular.

3. Then dry the parts, by heating where possible but without using compressed air (it generally contains polluting substances), taking care not to exceed a temperature of 80 °C.
4. The sequence of reassembly is the inverse of the disassembly operation. Take the same precautions:
   - Spread some clean oil of the same type as used to lubricate the pump over the different parts, in particular the inner lip of the oil seal, the bushings and vanes.
   - If the oil seal has the dust-block lip, 2/3 fill the area between the two lips with ISOFLEX TOPAS NB5051 grease.

☞ **CAUTION**

Do not allow the grease into the area of the circumferential spring.

- Lock without forcing the nuts on the four tie-rods (44) connecting the parts of the pump block. Before locking, check that all parts are touching as required.
- Before putting the springs and shutters of the discharge valves back in, pour a little oil into the stators through the holes in the valves.

☞ **CAUTION**

Before hooking the recall spring to the anti-suckback command bar, make sure you have put the bar all the way into the sleeve of the rotary feedthrough to avoid bending the tapered part of the bar.

NOTE

On DS102 1Ph, DS202 1Ph and DS302 1Ph pumps, fit the joint on the motor shaft after careful removal of grease from the surfaces and application of LOCTITE 242.

VARIAN vacuum technologies	**Unscheduled Maintenance**	**Card No.** **102**

Pump type:	DS102 1Ph, DS202 1Ph, DS302 1Ph, DS402 1Ph, DS402 3Ph, DS602 1Ph, DS602 3Ph

Frequency:	AS REQUIRED	**Time:**	30 min.	**Machine status:**	**S** **R**

Type of action:	CHANGING OIL
Item:	LUBRICANT

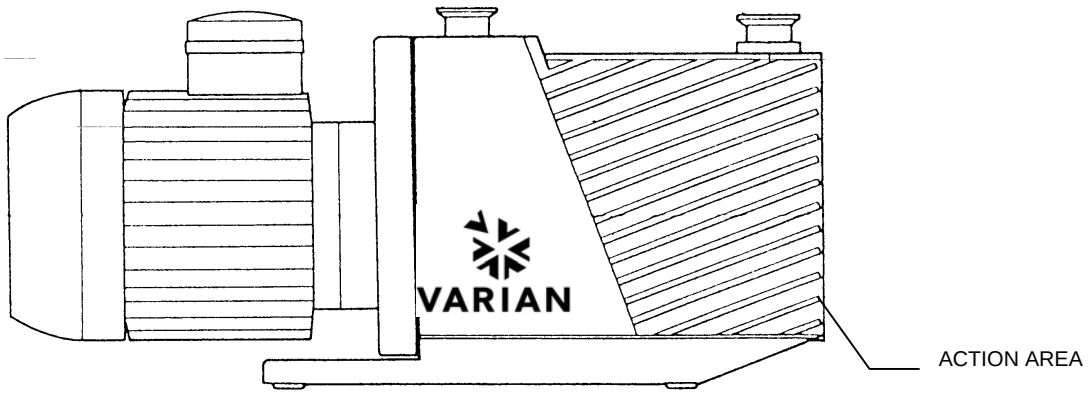

Materials required:	**Equipment required:**
• Varian GP oil (1 liter)	• Fixed wrench for oil exhaust. • Tank to collect oil. • Cotton (or other suitable material) rags for cleaning. • Soap and water solution for cleaning.

WARNING!

Do not change the oil immediately after stopping the machine as the oil temperature may still be high.

WARNING!

Machine safety: disconnect all power lines. Hang the card “MACHINE UNDERGOING MAINTENANCE - DO NOT POWER ON” from the main breaker switch. When finished, remove the safety warning.

WARNING!

If you have to perform maintenance on the pump after a considerable time in operation, leave it to cool as temperature of the outer surface may be in excess of 60 °C.

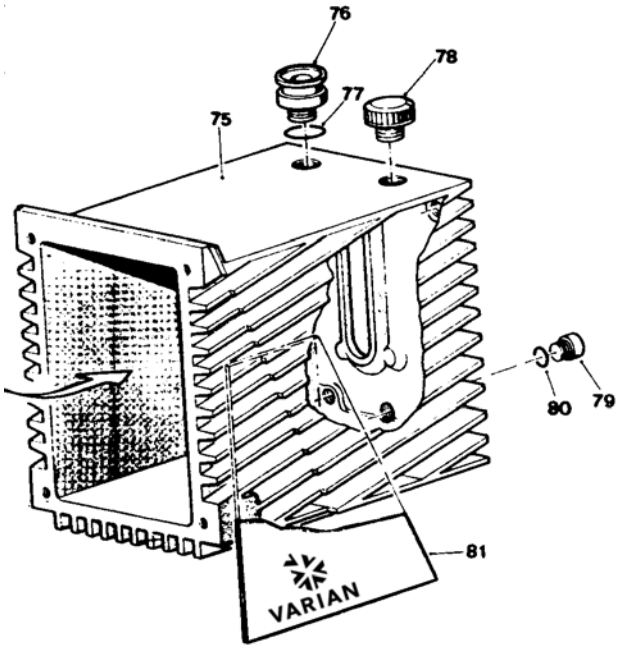

NOTE

The oil has to be replaced:

1) when it has become particularly dirty due to the presence of contaminants in the environments being evacuated;

2) when the degree of vacuum achieved by the pump is no longer satisfactory, even after running for one hour with the gas ballast device open.

1. Place a tank for the waste oil under the oil drain plug (79).

NOTE

You are advised to empty the pump before it cools down completely so that the oil flows out more easily.

NOTE

The pump contains up to 1 liter of oil - make sure the tank you use for the waste oil can hold this amount.

2. Open the oil drain plug (79) slowly; let the oil flow out by opening the fill plug (78) located at the top of the pump. In the meantime, clean the inside of the drain plug (magnetic plug).
3. After closing the drainage hole with its plug, make the pump perform a number of turns, giving it a brief current pulse, so as to let residual oil in the pump chambers flow out. Then drain off the residual oil again.
4. After all the oil has been drained, close the drain plug tight; take the tank of waste oil away and clean thoroughly, using rags of cotton or other suitable material to dry.
5. Clean thoroughly the pourer lip of the new oil tin; pour the oil slowly into the pump through the filler plug (78).

NOTE

Monitor through the sight glass at the front of the pump that you are not exceeding the maximum oil level permitted.

CAUTION

For disposal of waste oil, it is strictly necessary to respect the currently applicable legislation on this matter.

6. To achieve a good vacuum level again, run the pump for one hour with the gas ballast open.

VARIAN vacuum technologies	**Unscheduled Maintenance**	**Card No.** **103**

Pump type:	DS102 1Ph, DS202 1Ph, DS302 1Ph, DS402 1Ph, DS402 3Ph, DS602 1Ph, DS602 3Ph

Frequency:	WHEN DAMAGED	**Time:**	30 min.	**Machine status:**	**S** **R**

Type of action:	DISASSEMBLY
Item:	SIGHT GLASS

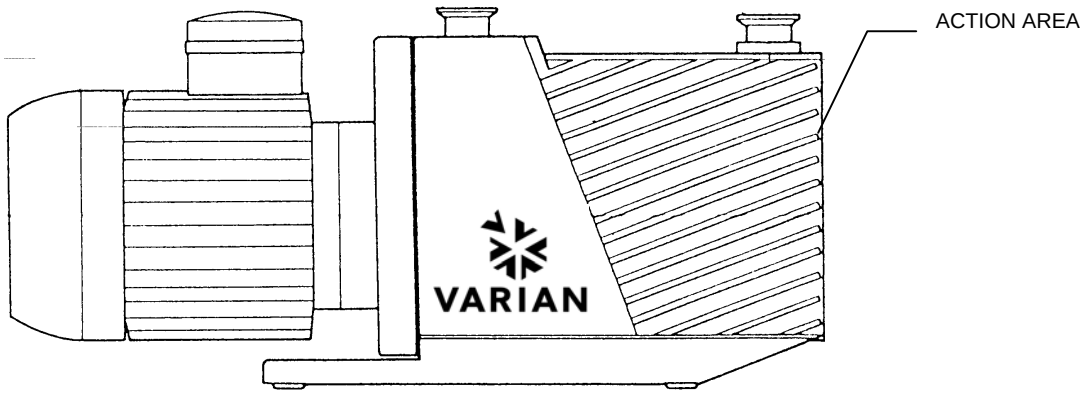

Materials required:	**Equipment required:**
• OR gaskets (for pumps DS102 1Ph, DS202 1Ph and DS302 1Ph Gaskets kit p/n 949-9370) (for pumps DS402 1Ph, DS402 3Ph, DS602 1Ph and DS602 3Ph Gaskets kit p/n 949-9371) • Sight glass	• Mechanical tools

WARNING!

Machine safety: disconnect all power lines. Hang the card “MACHINE UNDERGOING MAINTENANCE - DO NOT POWER ON” from the main breaker switch. When finished, remove the safety warning.

WARNING!

If you have to perform maintenance on the pump after a considerable time in operation, leave it to cool as temperature of the outer surface may be in excess of 60 °C.

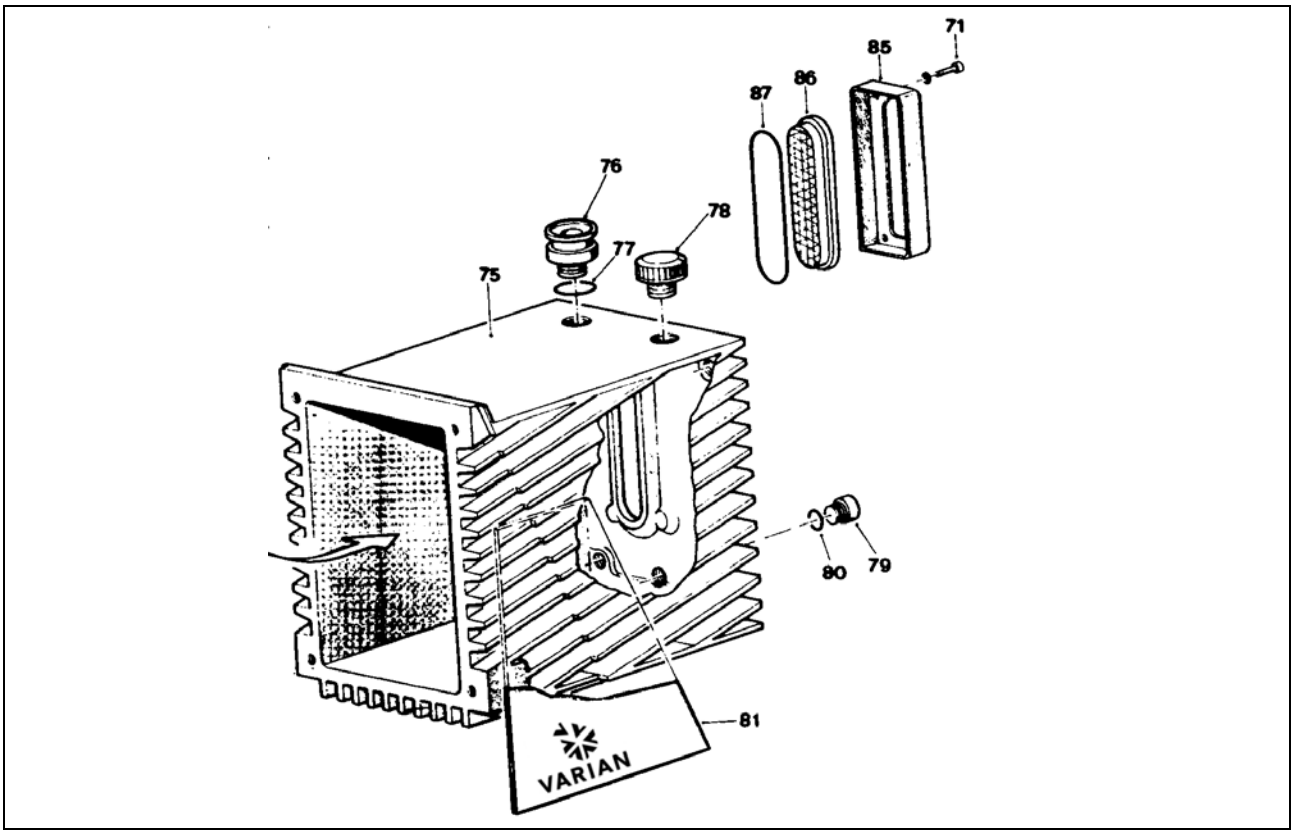

1. Drain off the oil from the pump.

NOTE

For a description of how to drain off the oil, see the Unscheduled Maintenance Card No. 102.

2. Unscrew the securing screws (71) and disconnect the flange (85) from the casing.
3. Take out the OR gasket (87) and the sight glass (86).

NOTE

When reassembling, replace the gaskets that you have stripped down.

CAUTION

When reassembly is complete, proceed to fill the pump with oil again following the instructions of Unscheduled Maintenance Card No. 102.

VARIAN vacuum technologies	**Unscheduled Maintenance**	**Card No.** **104**

Pump type:	DS102 1Ph, DS202 1Ph, DS302 1Ph, DS402 1Ph, DS402 3Ph, DS602 1Ph, DS602 3Ph

Frequency:	WHEN DAMAGED	**Time:**	30 min.	**Machine status:**	**S** **R**

Type of action:	REPLACEMENT
Item:	ANTI-SUCKBACK DEVICE SHUTTER

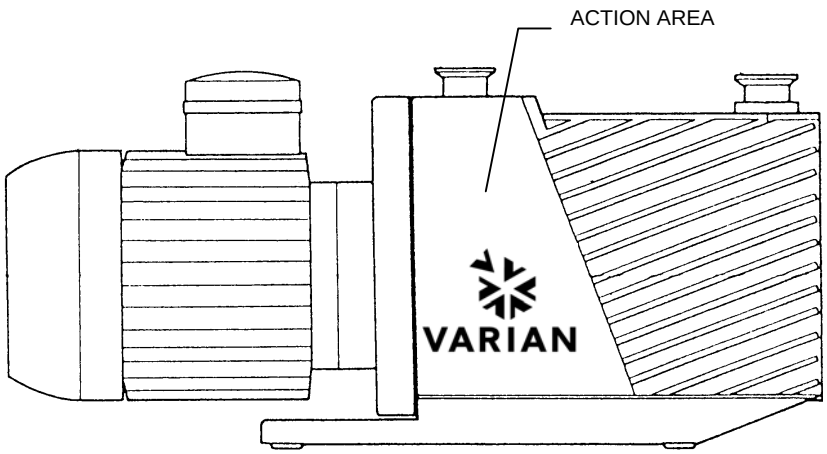

Materials required:	**Equipment required:**
• Shutter	• Mechanical tools

WARNING!

Machine safety: disconnect all power lines. Hang the card “MACHINE UNDERGOING MAINTENANCE - DO NOT POWER ON” from the main breaker switch. When finished, remove the safety warning.

WARNING!

If you have to perform maintenance on the pump after a considerable time in operation, leave it to cool as temperature of the outer surface may be in excess of 60 °C.

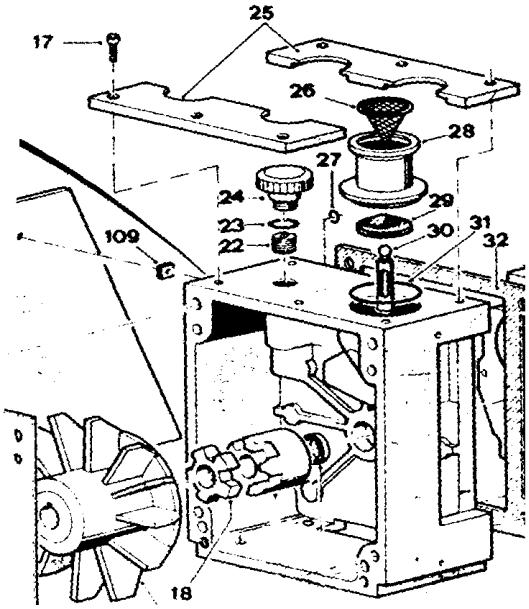

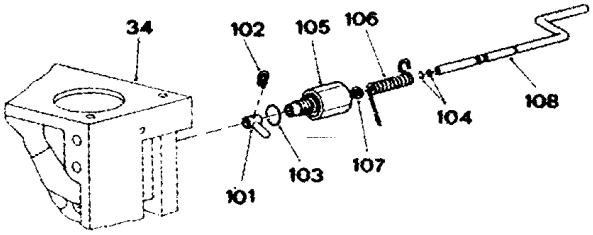

1. Disconnect the flange (28) from the inlet pipe line.
2. Remove the 6 securing screws (17) and remove the two half-plates (25) pressing the suction flange (28) into its seat.
3. Remove the flange (28) and take out the piston (30) with the shutter (29) of the anti-suckback device, disengage it by exerting force on arm (101). Separate the shutter (29) from the piston rod (30) simply by pulling.

☞ **CAUTION**

Be careful not to scratch the sealing surface of the shutter (29).

4. Reassemble by proceeding in the inverse order.

VARIAN vacuum technologies	**Unscheduled Maintenance**	**Card No.** **105**

Pump type:	DS102 1Ph, DS202 1Ph, DS302 1Ph, DS402 1Ph, DS402 3Ph, DS602 1Ph, DS602 3Ph

Frequency:	WHEN DAMAGED	**Time:**	30 min.	**Machine status:**	**S** **R**

Type of action:	REPLACEMENT
Item:	ELECTRIC MOTOR AND JOINT

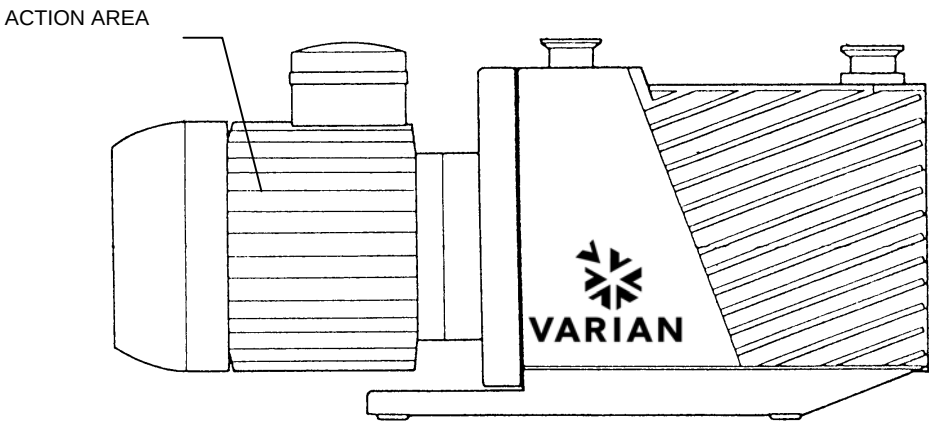

Materials required:	**Equipment required:**
• Electric motor	• Mechanical tools

⚠ **WARNING!**

Machine safety: disconnect all power lines. Hang the card “MACHINE UNDERGOING MAINTENANCE - DO NOT POWER ON” from the main breaker switch. When finished, remove the safety warning.

⚠ **WARNING!**

If you have to perform maintenance on the pump after a considerable time in operation, leave it to cool as temperature of the outer surface may be in excess of 60 °C.

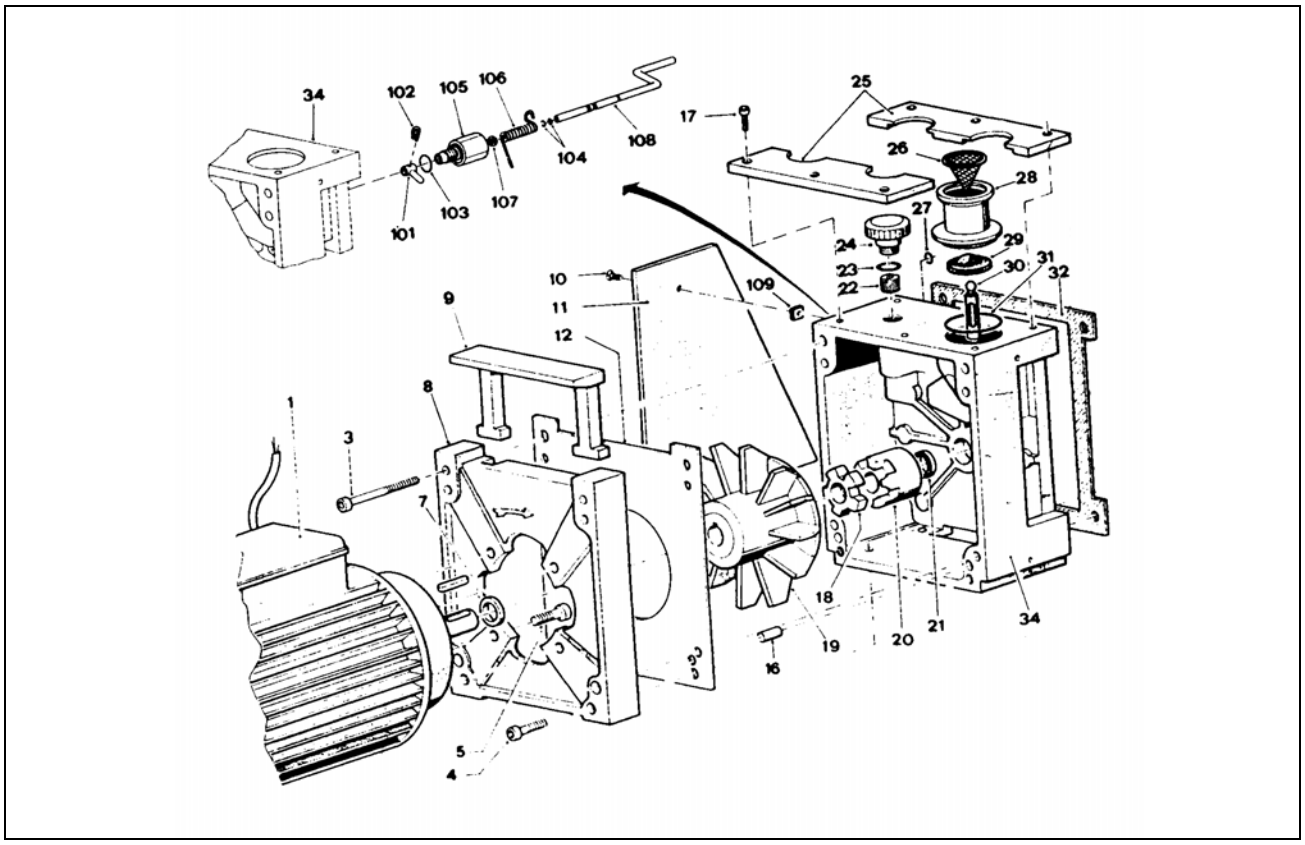

1. Disconnect the motor bearing plate (8) from the support (34) by removing the four screws (4).
2. Remove the half-joint/fan (19) from the support, together with the motor (1), the plate (8) and the plate (12) (for the DS402 1Ph, DS402 3Ph, DS602 1Ph and DS602 3Ph only).
3. Slacken the nut blocking the half-joint (19) to the motor shaft and take it out, using leverage between the plate (8) and the back of the joint.
4. Remove the four screws (5) and separate the plate (8) from the motor (1).
5. Reassemble by proceeding in the inverse order.

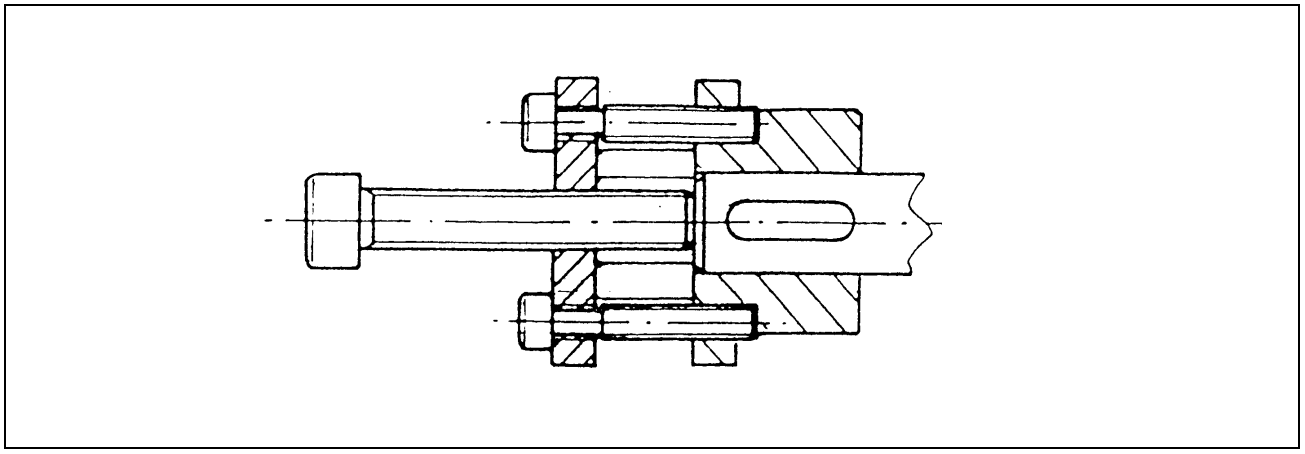

Extractor

VARIAN vacuum technologies	**Unscheduled Maintenance**	**Card No.** **106**

Pump type:	DS102 1Ph, DS202 1Ph, DS302 1Ph, DS402 1Ph, DS402 3Ph, DS602 1Ph, DS602 3Ph

Frequency:	WHEN DAMAGED	**Time:**	1 hour	**Machine status:**	**S** **R**

Type of action:	DISASSEMBLY
Item:	DISCHARGE VALVES

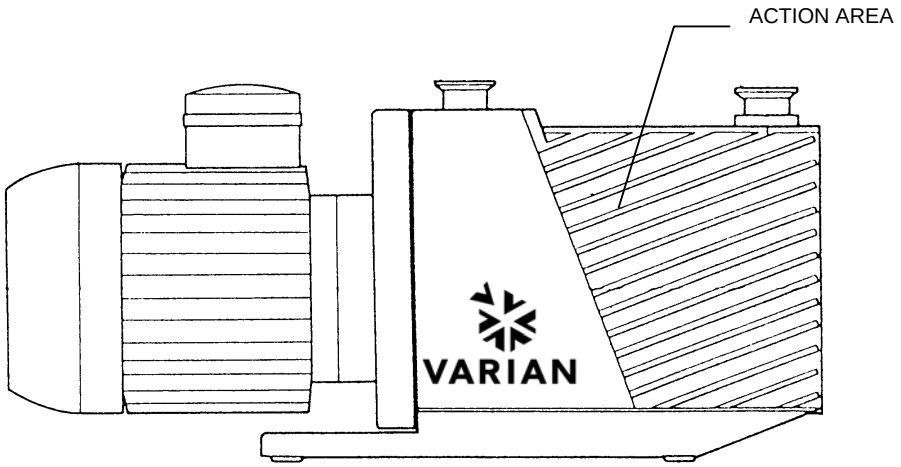

Materials required:	**Equipment required:**
• Valves (Gaskets kit)	• Mechanical tools

WARNING!

Machine safety: disconnect all power lines. Hang the card “MACHINE UNDERGOING MAINTENANCE - DO NOT POWER ON” from the main breaker switch. When finished, remove the safety warning.

WARNING!

If you have to perform maintenance on the pump after a considerable time in operation, leave it to cool as temperature of the outer surface may be in excess of 60 °C.

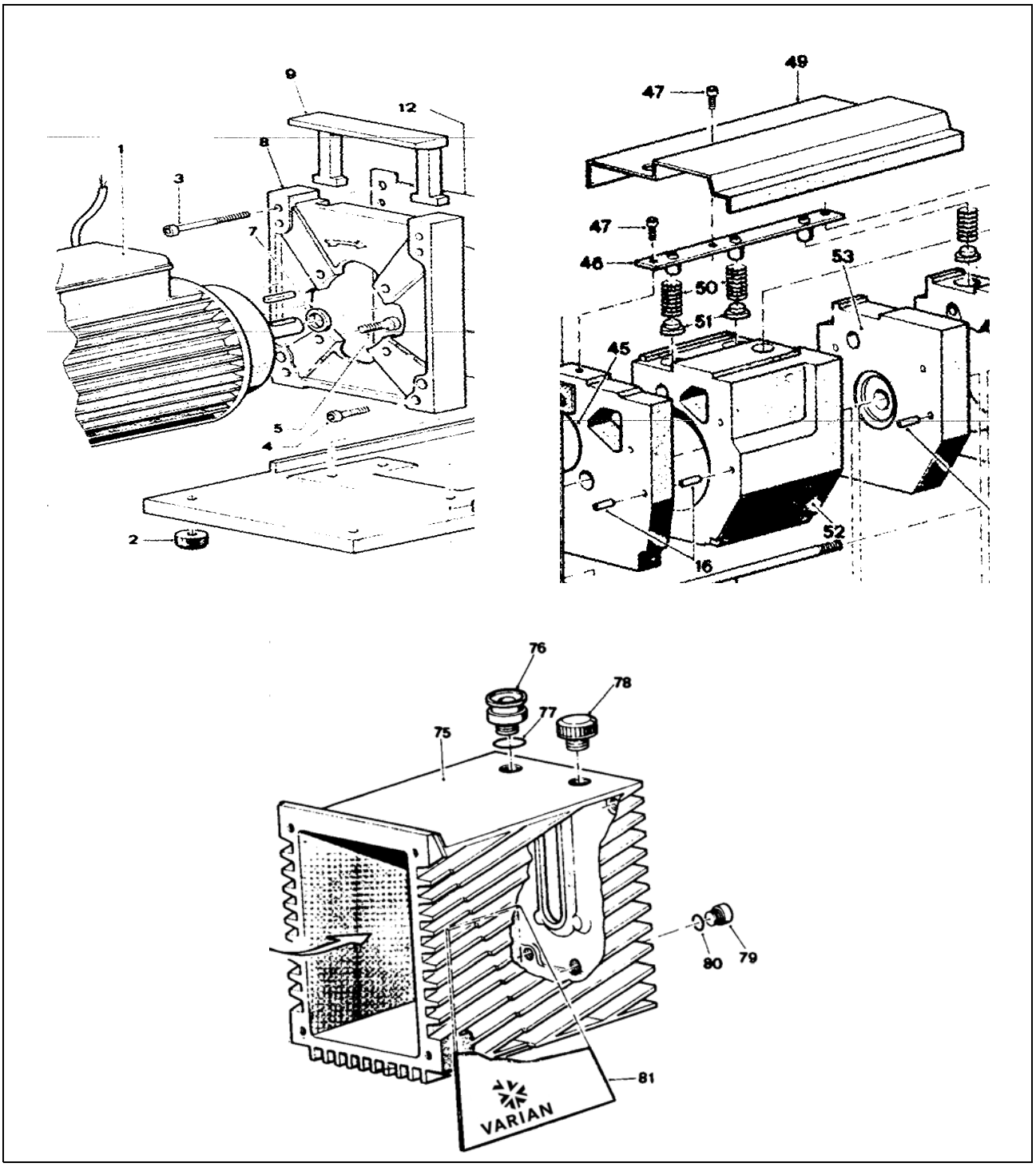

1. Drain off all the oil from the pump.

NOTE

For a description of how to drain off the oil, see the Unscheduled Maintenance Card No. 102.

2. Disconnect the discharge flange from its piping.
3. Remove the nuts (3) and remove the pump casing (75).
4. Remove the securing screw (47) holding the splash guard (49) and remove it.

5. Remove the two screws (47) on the valve press-bracket (46) and remove the bracket (46), the springs (50) and the shutters (51).

6. Reassemble by proceeding in the inverse order.

NOTE

When reassembling, replace all the gaskets stripped down.

☞ **CAUTION**

When reassembly is complete, proceed to fill the pump with oil following the instructions of Unscheduled Maintenance Card No. 102.

VARIAN vacuum technologies	**Unscheduled Maintenance**	**Card No.** **107**

Pump type:	DS102 1Ph, DS202 1Ph, DS302 1Ph, DS402 1Ph, DS402 3Ph, DS602 1Ph, DS602 3Ph

Frequency:	WHEN DAMAGED	**Time:**	1 hour	**Machine status:**	**S** **R**

Type of action:	DISASSEMBLY
Item:	OIL CIRCULATION PUMP

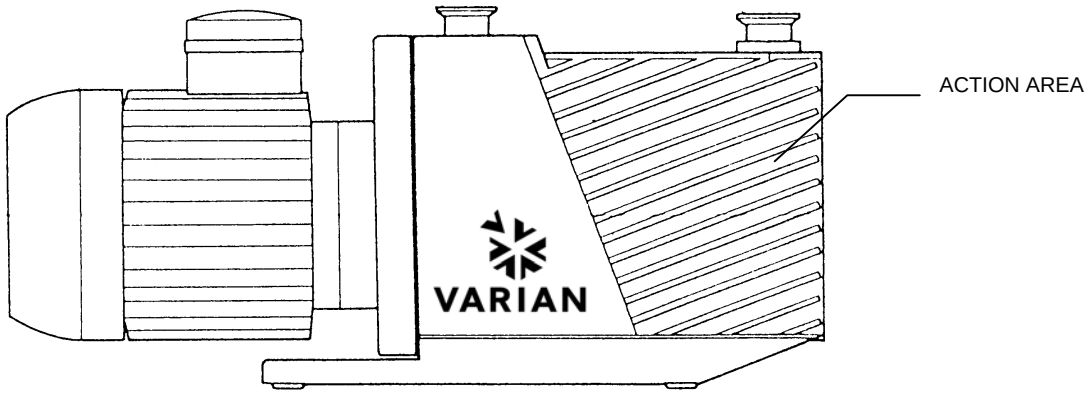

Materials required:	**Equipment required:**
• Oil circulating pump	• Mechanical tools

WARNING!

Machine safety: disconnect all power lines. Hang the card “MACHINE UNDERGOING MAINTENANCE - DO NOT POWER ON” from the main breaker switch. When finished, remove the safety warning.

WARNING!

If you have to perform maintenance on the pump after a considerable time in operation, leave it to cool as temperature of the outer surface may be in excess of 60 °C.

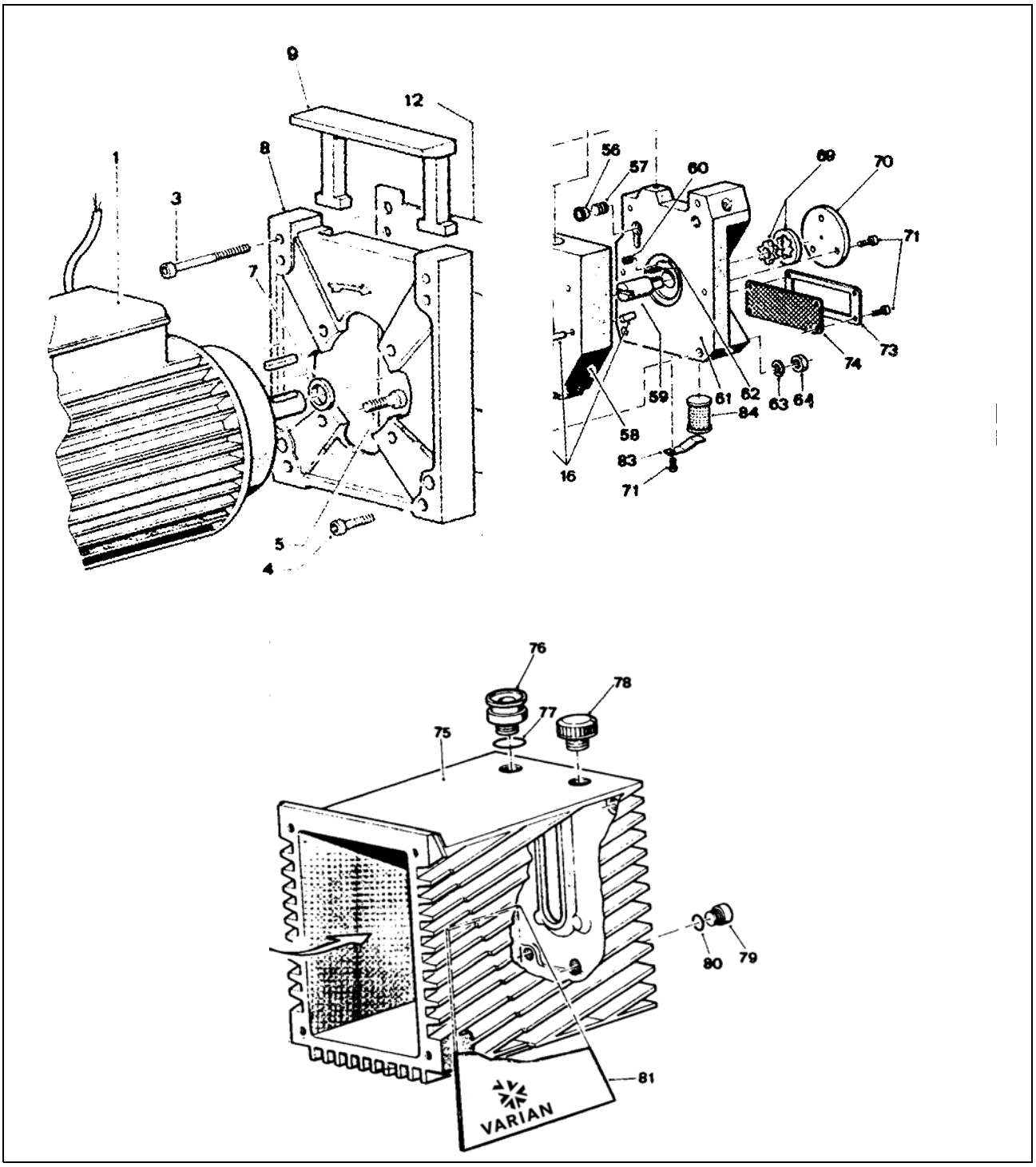

1. Drain off all the oil from the pump.

NOTE

For a description of how to drain the oil from the pump, see the Unscheduled Maintenance Card No. 102.

2. Disconnect the discharge flange from its piping.
3. Remove the nuts (3) and remove the casing from the pump (75).
4. Remove the three screws (71) connecting the closing plate (70) to the side and take it out.
5. Remove the pump gear-wheels (69).

NOTE

A magnet may be used to remove the gear-wheels.

6. Reassemble by proceeding in the inverse order.

NOTE

When reassembling, replace all the gaskets you have stripped down.

☞ **CAUTION**

When reassembly is complete, proceed to fill the pump with oil again following the instructions of Unscheduled Maintenance Card No. 102.

VARIAN vacuum technologies	**Unscheduled Maintenance**	**Card No.** **108**

Pump type:	DS102 1Ph, DS202 1Ph, DS302 1Ph, DS402 1Ph, DS402 3Ph, DS602 1Ph, DS602 3Ph

Frequency:	WHEN DAMAGED	**Time:**	1 hour	**Machine status:**	**S** **R**

Type of action:	DISASSEMBLY
Item:	ANTI-SUCKBACK DEVICE

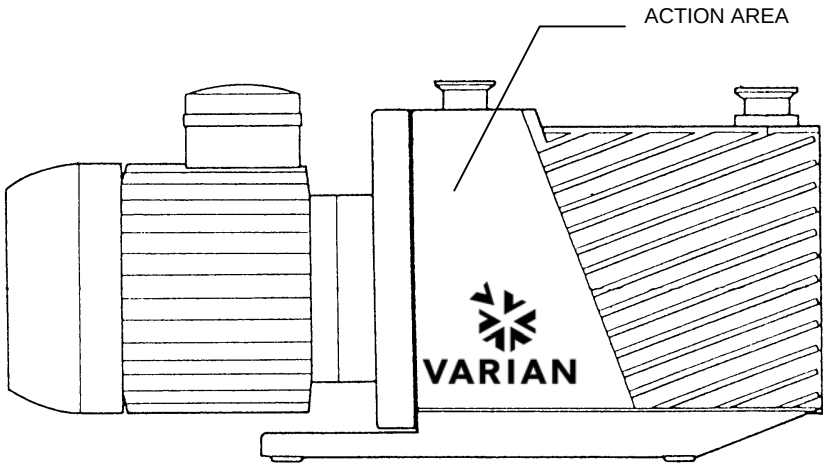

Materials required:	**Equipment required:**
• Gaskets kit	• Mechanical

WARNING!

Machine safety: disconnect all power lines. Hang the card “MACHINE UNDERGOING MAINTENANCE - DO NOT POWER ON” from the main breaker switch. When finished, remove the safety warning.

WARNING!

If you have to perform maintenance on the pump after a considerable time in operation, leave it to cool as temperature of the outer surface may be in excess of 60 °C.

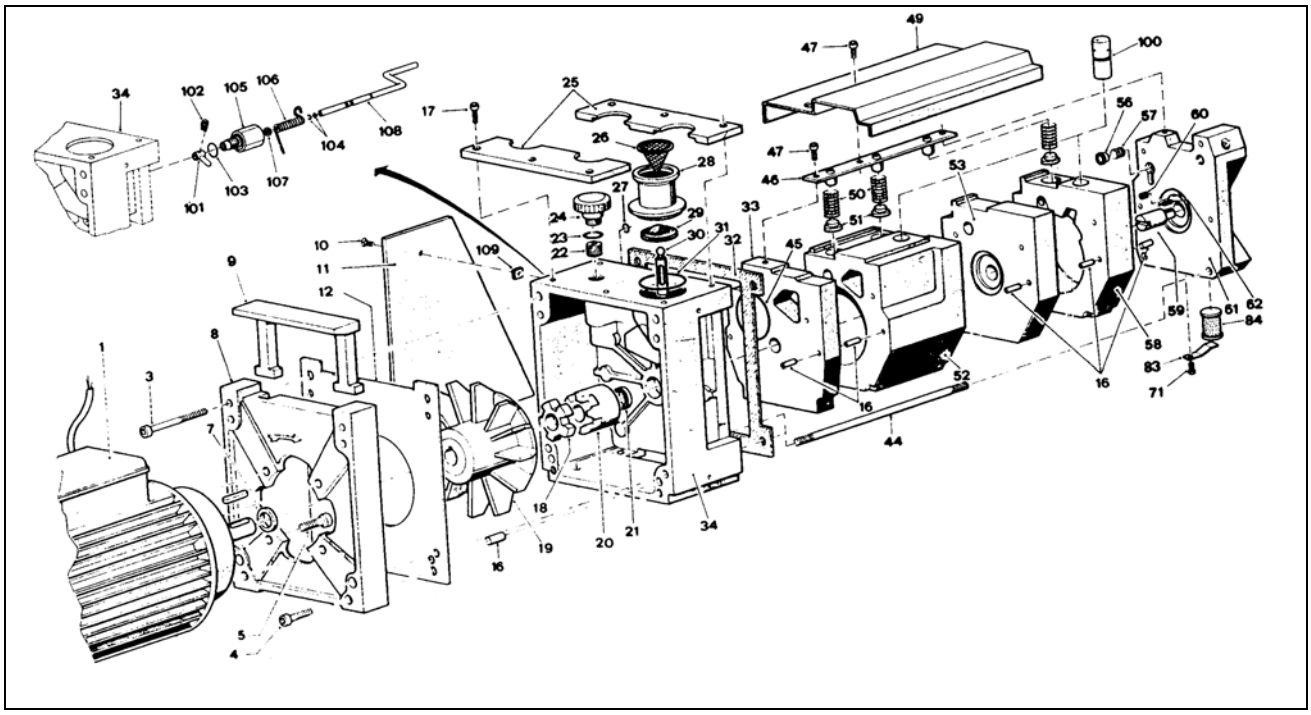

1. Drain off all the oil from the pump.

NOTE

For a description of how to drain the oil, see the Unscheduled Maintenance Card No. 102.

2. Disconnect the discharge flanges from their piping.
3. Remove the locking nuts (3) and remove the casing (75) from the pump.
4. Remove the securing screw (47) and remove the splash guard (49).
5. Remove the shutter from the anti-suckback device.

NOTE

For more details on how to remove the anti-suckback device, see Unscheduled Maintenance Card No. 104.

6. Remove the screw (102), take out the arm (101) from the rod.
7. Release the spring (106) from the rod arm (108).
8. Pull the rod (108) out of the rotary feedthrough (105) sleeve.
9. Remove the two OR gaskets (104) from the rod (108) using a screwdriver, if necessary. Be careful not to bend the rod in doing so.
10. Remove the sleeve (105) and remove it from the support (34) together with its OR gasket (103).
11. Remove the hydraulic piston (100) from its seat in the body.
12. Reassemble by proceeding in the inverse order.

NOTE

When reassembling, replace all the gaskets stripped down.

☞ **CAUTION**

When reassembly is complete, proceed to fill the pump with oil again following the instructions of Unscheduled Maintenance Card No. 102.

VARIAN vacuum technologies	**Unscheduled Maintenance**	**Card No.** **109**

Pump type:	DS102 1Ph, DS202 1Ph, DS302 1Ph, DS402 1Ph, DS402 3Ph, DS602 1Ph, DS602 3Ph

Frequency:	WHEN DAMAGED	**Time:**	1 hour	**Machine status:**	**S** **R**

Type of action:	DISASSEMBLY
Item:	PUMP BODY

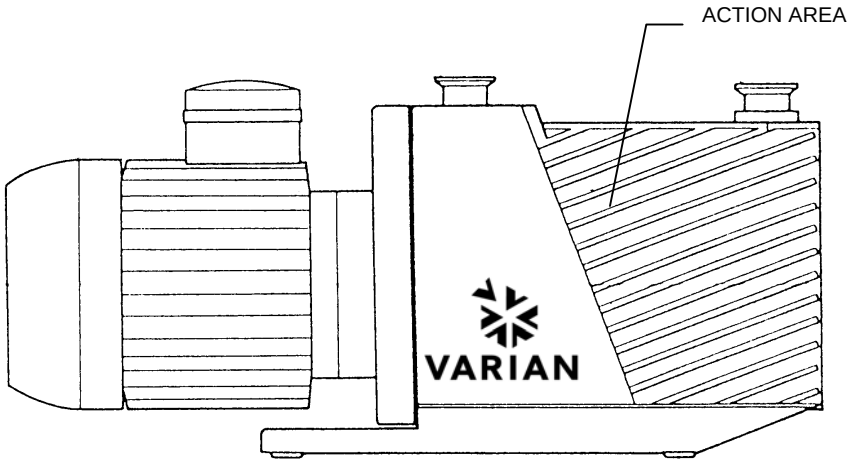

Materials required:	**Equipment required:**
• Gaskets kit	• Mechanical tools

WARNING!

Machine safety: disconnect all power lines. Hang the card “MACHINE UNDERGOING MAINTENANCE - DO NOT POWER ON” from the main breaker switch. When finished, remove the safety warning.

WARNING!

If you have to perform maintenance on the pump after a considerable time in operation, leave it to cool as temperature of the outer surface may be in excess of 60 °C.

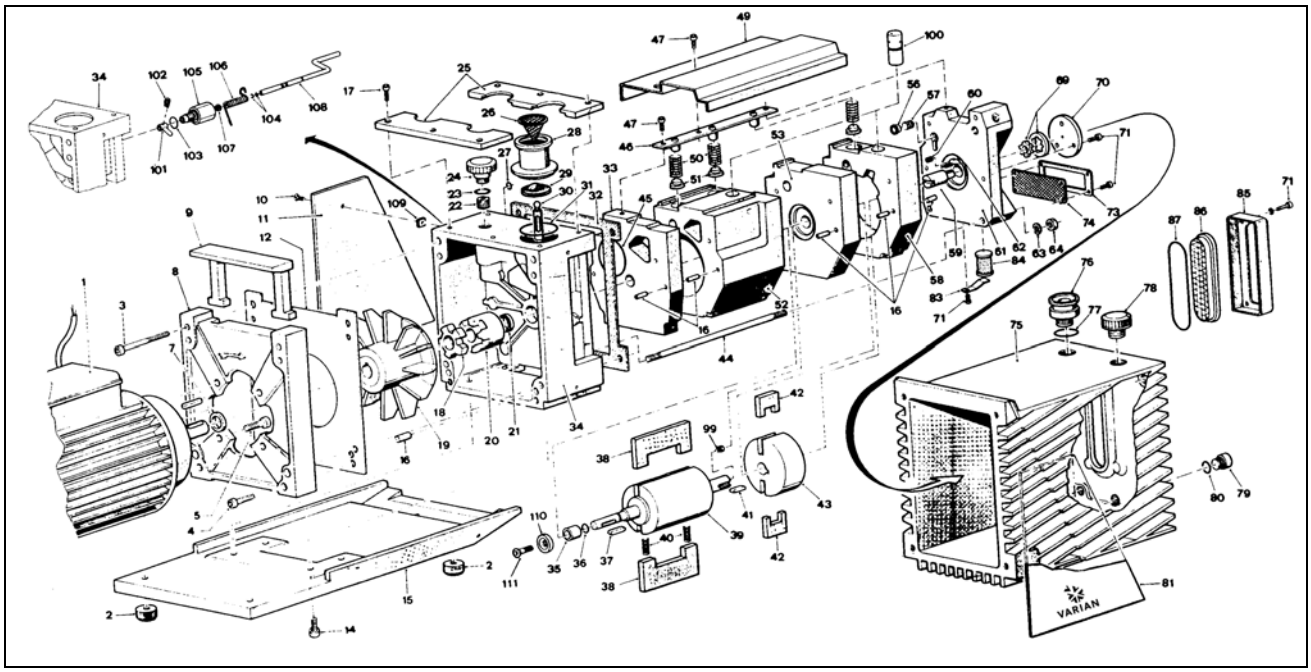

1. Drain off all the oil from the pump.

NOTE

For a description of how to drain off the oil, see the Unscheduled Maintenance Card No. 102.

2. Disconnect the discharge flange from its piping.
3. Disconnect the electric motor (1) complete with half-joint.

NOTE

For a description of how to disassemble the electric motor, see the Unscheduled Maintenance Card No. 105.

4. (On DS402 1Ph, DS402 3Ph, DS602 1Ph and DS602 3Ph: remove the screw (111) and remove the seal (110)). Slacken the nut locking the half-joint (20) to the shaft of the rotor (39) and take out the half-joint. Remove the tongue (37) with it as well.
5. Unscrew the securing screw (47) and remove the valve screen (49).
6. Slacken the four nuts (64) and take out the tie-rods (44) and the complete functional block (76), lifting it from the pump support (34) and take out the OR gaskets (27) and (45), from the gas ballast line and suction line respectively.

☞ **CAUTION**

Be careful not to cut the lip of the oil seal with the sharp edges of the shaft key seat.

7. Reassemble by proceeding in the inverse order.

NOTE

When reassembling, replace all the gaskets stripped down.

☞ **CAUTION**

When reassembly is complete, proceed to fill the pump with oil again following the instructions of Unscheduled Maintenance Card No. 102.

VARIAN vacuum technologies	**Unscheduled Maintenance**	**Card No.** **110**

Pump type:	DS402 1Ph, DS402 3Ph, DS602 1Ph, DS602 3Ph

Frequency:	WHEN DAMAGED	**Time:**	1 hour and 15 min.	**Machine status:**	**S** **R**

Type of action:	REPLACEMENT
Item:	OIL SHAFT SEAL / ANTI-WEAR BUSHING

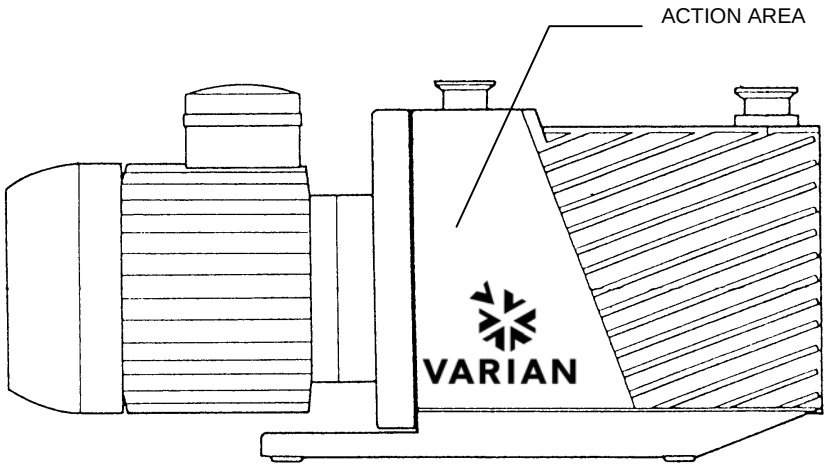

Materials required:	**Equipment required:**
• Oil shaft seal • Anti-wear bushing • Gaskets kit	• Mechanical tools

WARNING!

Machine safety: disconnect all power lines. Hang the card “MACHINE UNDERGOING MAINTENANCE - DO NOT POWER ON” from the main breaker switch. When finished, remove the safety warning.

WARNING!

If you have to perform maintenance on the pump after a considerable time in operation, leave it to cool as temperature of the outer surface may be in excess of 60 °C.

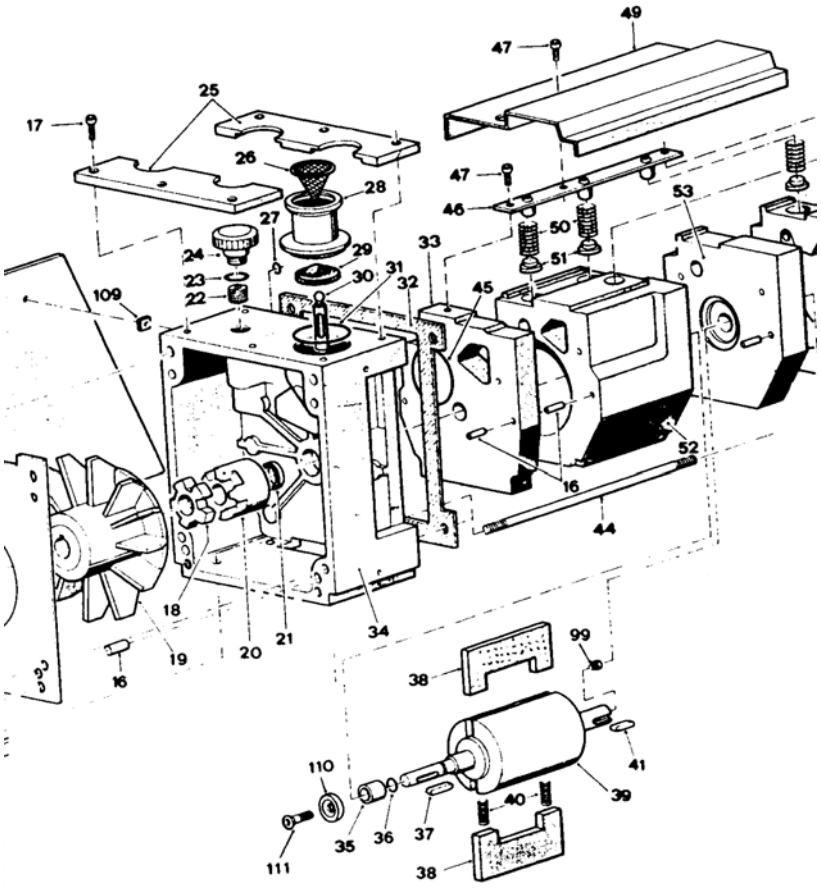

1. Drain off all the oil from the pump.

NOTE

For a description of how to drain off the oil, see the Unscheduled Maintenance Card No. 102.

2. Separate the functional block from the pump support.

NOTE

For a description of how to separate the functional block from the support, see the Unscheduled Maintenance Card No. 109.

3. Remove the worn out oil shaft seal (21) from the pump support (34) using a screwdriver for leverage and taking care not to scratch the seat.
4. Take the anti-wear bushing (35) off the shaft and take out the OR Gasket (36).

NOTE

For assembly of the new oil shaft seal, a special tool is needed.

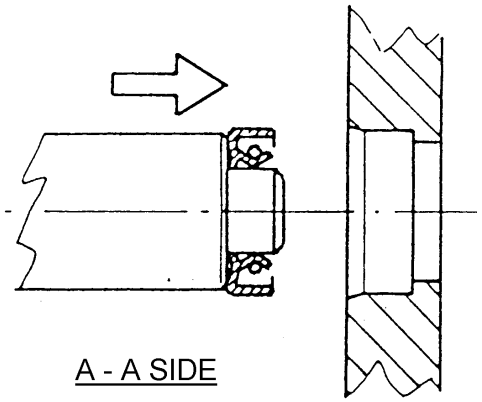

5. After applying silicone grease to the external diameter of the oil seal, engage it on the tool and push it into its seat.
6. Reassemble by proceeding in the inverse order.

NOTE

When reassembling, replace all the gaskets stripped down.

CAUTION

When reassembly is complete, proceed to fill the pump with oil again following the instructions of Unscheduled Maintenance Card No. 102.

VARIAN vacuum technologies	**Unscheduled Maintenance**	**Card No.** **111**

Pump type:	DS102 1Ph, DS202 1Ph, DS302 1Ph, DS402 1Ph, DS402 3Ph, DS602 1Ph, DS602 3Ph

Frequency:	WHEN DAMAGED	**Time:**	2 hours	**Machine status:**	**S** **R**

Type of action:	DISASSEMBLY
Item:	FUNCTIONAL BLOCK ROTORS

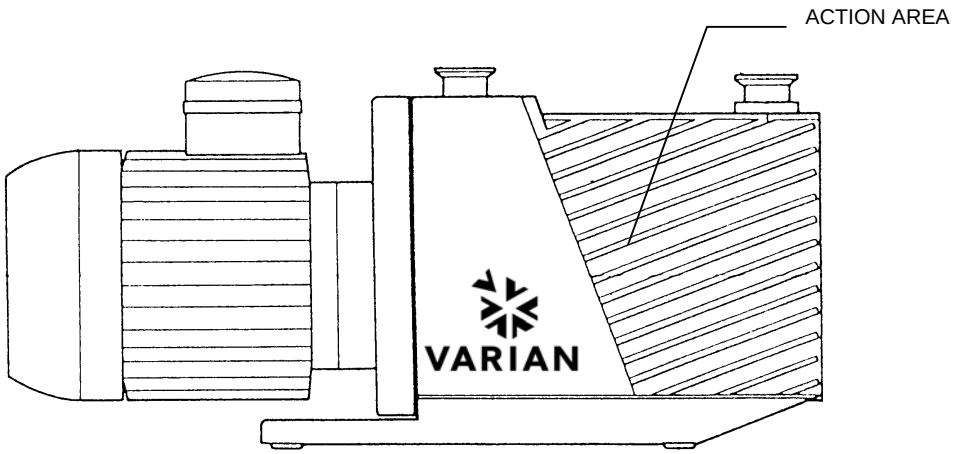

Materials required:	**Equipment required:**
• Oil shaft seal ring • Anti-wear bushing • OR gaskets • 1st stage vanes • 2nd stage vanes • Gas Ballast shutter (the above items of material are included in the Major Maintenance kit)	• Mechanical tools

WARNING!

Machine safety: disconnect all power lines. Hang the card “MACHINE UNDERGOING MAINTENANCE - DO NOT POWER ON” from the main breaker switch. When finished, remove the safety warning.

WARNING!

If you have to perform maintenance on the pump after a considerable time in operation, leave it to cool as temperature of the outer surface may be in excess of 60 °C.

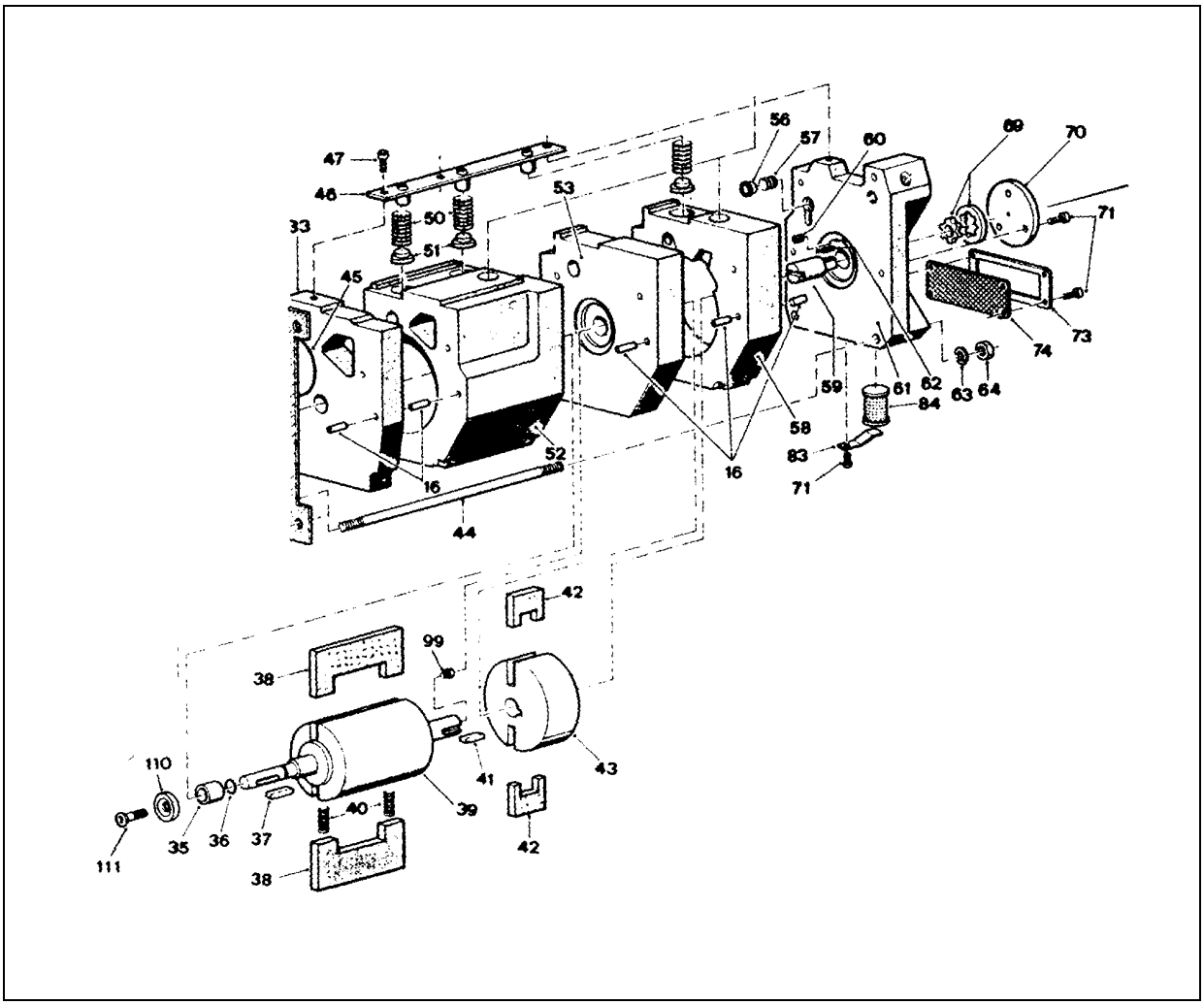

1. Drain off all the oil from the pump.

NOTE

For a description of how to drain the oil from the pump, see the Unscheduled Maintenance Card No. 102.

2. Detach the entire functional block from the pump support.

NOTE

For a description of how to detach the functional block, see the Unscheduled Maintenance Card No. 109.

3. Disassemble the discharge valves.

NOTE

For a description of how to disassemble the discharge valves, see the Unscheduled Maintenance Card No. 106.

4. Detach the end plate (61) from the rest of the pump body, exerting leverage if necessary on the reference notches between the parts. This will give you access to the retaining valve (56) and associated spring (57) at the gas ballast inlet.
5. Disconnect the 2nd stage stator (58), remove the two vanes (42), take the 2nd stage rotor (43) off the shaft and take out the key (41).
6. Remove the partition wall (53) from between the 1st and 2nd stages.
7. Detach the 1st stage stator (52) from the inner side (33), pressing back on the springs (40) of the vanes (38) to avoid the vanes from touching against the sharp corners of the body and becoming damaged.
8. Take out the 1st stage rotor (39), the vanes (38) and the springs (40).
9. Reassemble by proceeding in the inverse order.

NOTE

When reassembling, replace all the gaskets stripped down.

☞ **CAUTION**

After reassembly is complete, proceed to fill the pump again with oil following the instructions of Unscheduled Maintenance Card No. 102.

TROUBLESHOOTING AND CORRECTIVE ACTION

NOTE

If the pump breaks down or does not work well, first check thoroughly that all the standards rules listed in the sections relevant installation and operation are currently observed.
If you cannot get sufficiently low pressure, the problem may lie with the system connected to the pump, i.e. the vacuum chamber and inlet line.
Even when the design sizes are correct, the problems listed below are still fairly frequent:

a) faulty seals: check that the seals are fitted, are in good working order and are clean; check all joints, taps, sight glasses, weld joints, etc.

b) unsuitable materials: avoid the use of rubber, plastic or even metal parts that are porous or permeable.

c) volatile substances: as far as possible, eliminate humidity, grease, dirt, rust, solvents (even small traces).

	SYMPTOM	PROBABLE CAUSE	SUGGESTED REMEDY	CARD REF.
1	The pump does not start (or stops immediately).	A) The motor-pump coupling is defective.	Check state of the elastic joint and replace the parts as needed.	105
		B) Viscosity of the oil has increased.	Examine the oil and change if necessary (find out why it has deteriorated).	102
		C) Excessive friction inside pump.	Test the resistance to rotation, by turning the joint by hand. If the rotors are blocked, disassemble the pump body and check state of the parts inside.	111
		D) Electrical protections not set.	Adjust the protections.	
		E) Oil too viscous because of low room temperature.	Heat the oil up to a temperature of 20 °C or use an oil recommended for low temperatures.	102
		F) Direction of rotation inverted (only 3-phase motors).	Change over two phase wires of the electric power supply.	
2	The pump stops (stalls).	A) Seizure of some internal parts.	Proceed as at 1-C.	
		B) Oil very dirty.	Proceed as at 1-B.	
3	The pump overheats.	A) Too much friction inside.	Proceed as at 1-C.	
		B) Oil ducts clogged inside.	Try changing the oil, otherwise disassemble the pump and clean it well.	102 111
4	Too much oil drained off by the exhaust.	A) Gas Ballast device broken (always open).	Check the device to ensure the gas ballast is properly adjusted.	111
		B) Heavy duty work (high suction pressures or very frequent cycles).	Check condition of the oil trap filter.	
		C) Leak in system.	Check the system (see “Note”).	
5	The pump is loosing oil.	A) Seal on shaft defective.	Replace the oil seal and the anti-wear bushing.	110
		B) Other gaskets defective.	Identify the areas where seeping occurs and check the associated gaskets.	Refer to the card related to involved item
		C) Oil level window broken	Replace the oil level window.	

	SYMPTOM	PROBABLE CAUSE	SUGGESTED REMEDY	CARD REF.
6	The pump is very noisy even at steady operating conditions.	A) Exhaust valves damaged.	Inspect the valves.	106
		B) High suction pressure, or gas ballast device is open.	Check the system and the gas ballast valve (see items 4-A and 4-B).	
		C) Elastic star of joint is damaged.	Check and replace if necessary.	
		D) A screw of the joint has become loose.	Lock the screw after application of Loctite 222 (for slack threads).	
7	When the pump is stopped, the inlet pressure rises rapidly.	A) The anti-suckback device is defective.	Disassemble and check the anti-suckback device.	108
		B) The cause of the problem is not with the pump.	See “Note”.	
8	The pump does not produce a sufficient vacuum.	A) Not enough oil, or oil contaminated.	Check level and appearance of the oil. Open the Gas Ballast for half an hour at least; change the oil whenever necessary.	01 102
		B) Oil ducts clogged inside.	Proceed as at 3-B.	
		C) Direction of rotation inverted.	Proceed as at 3-C.	
		D) OR gaskets communicating with the inlet line defective.	Replace the gaskets.	109
		E) Exhaust valves damaged or out of place.	Proceed as at 6-A.	
		F) Insufficient oil pressure in the lubricating circuit, preventing the anti-suckback device from opening.	Inspect the gears of the oil pump and check that it is working.	107
		G) Internal moving parts worn.	Disassemble the pump, and replace any worn parts.	111
		H) Pump working with gas ballast device open.	Close the gas ballast device.	
		I) Anti-suckback valve fails to open.	Disassemble the suction flange and check the device.	104 108
		J) Parts of the functional block not in perfect contact because of deposits of dirt or failure to put a plug on the service holes.	Disassemble and check condition of the part surfaces and that plugs have been used.	111
		K) The cause of the problem is not with the pump.	See “Note”.	

SPARE PARTS LIST

OTHER SPARE PARTS	Q.TY					P/N
	DS102 1Ph	DS202 1Ph	DS302 1Ph	DS402 1Ph DS402 3Ph	DS602 1Ph DS602 3Ph	
MINOR MAINTE-NANCE KIT (*)	X	X	X			949-9370
MINOR MAINTE-NANCE KIT (*)				X	X	949-9371
MAJOR MAINTE-NANCE KIT (**)	X					949-9380
MAJOR MAINTE-NANCE KIT (**)		X	X			949-9381
MAJOR MAINTE-NANCE KIT (**)				X	X	949-9382

ACCESSORY ITEM ON EXHAUST	Q.TY					P/N
	DS102 1Ph	DS202 1Ph	DS302 1Ph	DS402 1Ph DS402 3Ph	DS602 1Ph DS602 3Ph	
OIL MIST ELIMINA-TOR KF25	X	X	X	X	X	949-9395
OIL MIST CAR-TRIDGE (Q.ty 2)	X	X	X	X	X	949-9394

RECOMMENDED OIL	P/N	Q.TY
Varian GP oil (Europe)	949-9390	1 liter
Varian GP oil (Europe)	949-9391	2 liters
Varian GP oil (USA)	K7516301	1 liter
Varian GP oil (USA)	K7516302	1 gallon

(*) Contains all the valves, O-rings and seals to refurbish the pump to vacuum integrity.

(**) Includes all the items of the minor maintenance kit plus the vanes.

Varian S.p.A.
Via F.lli Varian, 54
10040 Leinì (TO) - Italy
Tel: +39-011-9979-111
Fax:+39-011-9979-237
http://www.varianinc.com

Varian GP - OIL - Scheda di sicurezza del materiale

DATA REVISIONE: DICEMBRE 2002

1. **Sostanza/Identificativo ditta**	NOME PRODOTTO:	**VARIAN GP-OIL 949-9390/949-9391** **NUMERO CAS: 64742-65-0**
2. **Composizione/Ingredienti**	NOME GENERICO:	Olio paraffinico neutro al 100% raffinato con solvente
	FORMULA CHIMICA:	(CH2)n 20 =< n =< 40
	INGREDIENTI PERICOLOSI:	Nessuno
3. **Identificazione dei rischi**	POSSIBILI VIE DI INGRESSO:	Ingerimento, inalazione di nebbie d'olio Il prodotto non è classificato come pericoloso.
	EFFETTI ACUTI:	L'esposizione alle nebbie d'olio può causare nausea e irritazione agli occhi. Non sono stati eseguiti studi dettagliati, tuttavia non si ritiene che il materiale possa causare dermatiti o avere effetti sensibilizzanti.
	EFFETTI CRONICI:	Sconosciuti
4. **Misure di primo intervento**	PELLE:	Lavare con acqua e sapone.
	OCCHI:	Sciacquare con abbondante acqua. Contattare un medico!
	INGERIMENTO:	Se la vittima è cosciente, somministrare liquidi ed indurre il vomito. Contattare un medico! Per piccole quantità penetrate in bocca è sufficiente risciacquare.
5. **Misure antincendio**	PUNTO DI INFIAMMABILITA':	>213° C
	METODO USATO:	Cleveland a vaso aperto
	LIMITI DI ESPLOSIVITÀ:	INFERIORE: Sconosciuto
		SUPERIORE: Sconosciuto
	MEZZO ESTINGUENTE:	Acqua nebulizzata, schiuma chimica o anidride carbonica. Materiale NFPA Classe III B.

Varian S.p.A.
Via F.lli Varian, 54
10040 Leinì (TO) - Italy
Tel: +39-011-9979-111
Fax:+39-011-9979-237
http://www.varianinc.com

	PROCEDURE ANTINCENDIO PARTICOLARI:	Quando si opera per spegnere un incendio in ambiente chiuso, indossare sempre il respiratore; la combustione incompleta di questo materiale genera monossido di carbonio!
	RISCHI DI INCENDIO E/O ESPLOSIONE PARTICOLARI:	Nessuno
6. **Misure contro le perdite accidentali**	PROCEDURE DA SEGUIRE NEL CASO DI PERDITE:	Piccole perdite possono essere asciugate con uno strofinaccio. Perdite maggiori devono essere immediatamente asportate utilizzando un mezzo assorbente.
7. **Movimentazione e magazzinaggio**	MOVIMENTAZIONE:	Nessun rischio conosciuto
	MAGAZZINAGGIO:	Nessun rischio conosciuto
8. **Controlli dell'esposizione/ Protezione personale**	MISURE DI CONTROLLO A LIVELLO INGEGNERIA:	Non necessarie
	PROTEZIONE RESPIRATORIA:	Vedere le note sulla ventilazione sotto citate.
	GUANTI PROTETTIVI:	Sì - in gomma impermeabile all'olio.
	OCCHIALI PROTETTIVI:	Sì - dotati di schermi laterali.
	ALTRI MEZZI PROTETTIVI:	Non necessari in condizioni di utilizzo normali.
9. **Proprietà chimiche e fisiche**	STATO FISICO:	Liquido
	PRESSIONE DEL VAPORE:	< 0001 Torr a 25° C
	PUNTO DI EBOLLIZIONE:	>200° C
	VELOCITÀ DI EVAPORAZIONE (etere=1):	Nulla
	DENSITÀ DEL VAPORE:	Circa 14
	% PESO COMP. VOLATILI:	Nulla
	DENSITA' RELATIVA:	0.87
	VISCOSITA':	54 cst a 40° C
	SOLUBILITA' IN ACQUA:	Nulla
	ASPETTO:	Liquido viscoso giallo pallido con leggero odore di petrolio

VARIAN

Varian S.p.A.
Via F.lli Varian, 54
10040 Leinì (TO) - Italy
Tel: +39-011-9979-111
Fax:+39-011-9979-237
http://www.varianinc.com

10. **Stabilità & Reattività**	STABILITÀ:	Materiale stabile
	CONDIZIONI DA EVITARE:	Esposizione continua a temperature > 200° C
	INCOMPATIBILITÀ (MATERIALI DA EVITARE):	Ossidanti potenti
	PRODOTTI DI DECOMPOSIZIONE PERICOLOSI:	La combustione incompleta può produrre monossido di carbonio.
11. **Informazioni tossicologiche**	LD50 ORALE ACUTA(MG/KG):	Nessuna nota
	LD 50 CUTANEA ACUTA:	Nessuna
	INALAZIONE ACUTA:	Il limite degli USA di esposizione alle nebbie d'olio TWA 8 ore è di 5 mg al metro cubo.
12. **Informazioni ecologiche**	AMBIENTALI:	Non sono previsti effetti ambientali negativi nel caso di uso e smaltimento secondo le indicazioni.
	MOBILITÀ:	Non volatile e non solubile in acqua.
	DEGRADABILITÀ:	Lentamente biodegradabile in condizioni aerobiche.
13. **Smaltimento**		Il prodotto e il relativo imballo devono essere smaltiti in base alla locale normativa vigente.
14. **Classificazione di trasporto**		Non classificato come a rischio per trasporto via aerea, nave o terra.
15. **Informazioni normative**		Nessuna
16. **Altre informazioni**	**VALUTAZIONE NFPA**	

INFIAMMABILITÀ	1
RISCHIO SALUTE	0
REATTIVITÀ	0
RISCHI PARTICOLARI	NESSUNO

Inspiring Excellence™

Varian S.p.A.
Via F.lli Varian, 54
10040 Leinì (TO) - Italy
Tel.: +39-011-9979-111
Fax:+39-011-9979-237
http://www.varianinc.com

Varian GP - OIL – Datenblatt zur Materialsicherheit

REVISIONSDATUM: DEZEMBER 2002

1. **Substanz/Herstelleridentifikation**	PRODUKTNAME:	**VARIAN GP-OIL 949-9390/949-9391** **CAS-NUMMER: 64742-65-0**
2. **Zusammensetzung/Inhaltsstoffe**	ALLGEMEINER NAME:	100 % neutrales mit Lösungsmittel raffiniertes Parafinöl
	CHEMISCHE FORMEL:	(CH2)n 20 =< n =< 40
	GEFÄHRLICHE INHALTS-STOFFE:	Keine
3. **Gefahrenidentifikation**	MÖGLICHE AUFNAHME:	Verschlucken, Einatmen von Ölnebel Dieses Produkt ist nicht als gefährlich klassifiziert.
	AKUTE WIRKUNGEN:	Sich öligen Dämpfen auszusetzen kann Übelkeit und Augenreizungen verursachen. Es wurden keine detaillierten Untersuchungen durchgeführt, es wird jedoch nicht erwartet, dass das Material Dermatitis verursacht oder ein Sensibilisator ist.
	CHRONISCHE WIRKUNGEN:	Unbekannt
4. **Erste-Hilfe-Maßnahmen**	HAUT:	Mit Seife und Wasser waschen.
	AUGEN:	Mit Wasser ausspülen. Einen Arzt verständigen!
	VERSCHLUCKEN:	Flüssigkeit verabreichen und Erbrechen herbeiführen, wenn das Opfer bei Bewusstsein ist. Einen Arzt verständigen! Kleine Mengen im Mund können ausgewaschen werden.
5. **Brandschutzmaßnahmen**	FLAMMPUNKT:	> 213° C
	METHODE:	Cleveland-Verfahren im offenen Tiegel
	EXPLOSIONSGRENZEN:	UNTERE: Unbekannt
		OBERE: Unbekannt
	LÖSCHMITTEL:	Wassernebel, chemischer Schaum oder Kohlendioxid. Material NFPA-Klasse III B.

Varian S.p.A.
Via F.lli Varian, 54
10040 Leinì (TO) - Italy
Tel.: +39-011-9979-111
Fax:+39-011-9979-237
http://www.varianinc.com

	SPEZIELLE LÖSCHMETHODEN:	Bei Feuer in geschlossenen Räumen Atemgerät tragen. Bei unvollständiger Verbrennung dieses Materials entsteht Kohlenmonoxid!
	BESONDERE BRAND- ODER EXPLOSIONSGEFAHREN:	Keine
6. **Bei unvorgesehener Freisetzung**	BEI FREISETZUNG ZU BEFOLGENDE VORGEHENSWEISEN:	Kleine Verluste können mit einem Lappen aufgewischt werden. Große Verluste sollten umgehend mit einem aufsaugenden Material aufgenommen werden.
7. **Handhabung und Lagerung**	HANDHABUNG:	Nicht bekannt
	LAGERUNG:	Nicht bekannt
8. **Expositionskontrolle/Personenschutz**	TECHNISCHE KONTROLL-MASSNAHMEN:	Nicht erforderlich
	ATEMSCHUTZ:	Siehe Anmerkungen zur Belüftung unten.
	SCHUTZHANDSCHUHE:	Ja – aus ölundurchlässigem Gummi.
	SCHUTZBRILLE:	Ja – Brille sollte seitliche Abschirmungen haben.
	WEITERE SCHUTZ-AUSRÜSTUNG:	Bei normaler Verwendung nicht erforderlich.
9. **Physikalische und chemische Eigenschaften**	PHYSIKALISCHE BESCHAFFENHEIT:	Flüssig
	DAMPFDRUCK:	< 0001 Torr bei 25° C
	SIEDEPUNKT:	> 200° C
	VERDAMPFUNGS-GESCHWINDIGKEIT (Äther=1):	Null
	DAMPFDICHTE:	ungefähr 14
	GWT % FLÜCHTIGE BESTANDTEILE:	Null
	RELATIVE DICHTE:	0.87
	VISKOSITÄT:	54 cst bei 40° C
	LÖSLICHKEIT IN WASSER:	Null
	AUSSEHEN:	Blassgelbe viskose Flüssigkeit mit schwachem Petroleumgeruch.

Varian S.p.A.
Via F.lli Varian, 54
10040 Leinì (TO) - Italy
Tel.: +39-011-9979-111
Fax:+39-011-9979-237
http://www.varianinc.com

10. **Stabilität und Reaktivität**	STABILITÄT:	Das Material ist stabil
	ZU VERMEIDENDE BEDINGUNGEN:	Kontinuierlich Temperaturen von > 200°C aussetzen
	INKOMPATIBILITÄT (ZU VERMEIDENDE MATERIALIEN)	Starke Oxidationsmittel
	GEFÄHRLICHE ZERFALLSPRODUKTE:	Unvollständige Verbrennung erzeugt Kohlenmonoxid.
11. **Toxikologische Informationen**	AKUT ORAL LD50 (MG/KG):	Nicht bekannt
	AKUT DERMAL LD 50:	Keine
	AKUTES EINATMEN:	Der US-amerikanische Grenzwert für die Ölnebelexposition TWA 8 Stunden beträgt 5 mg pro Kubikmeter.
12. **Umweltinformationen**	UMWELT:	Bei vorgeschriebener Verwendung/Entsorgung sind keine Umweltschäden zu erwarten.
	FLIESSFÄHIGKEIT:	Nicht flüchtig und nicht in Wasser löslich.
	ABBAU:	Unter aeroben Bedingungen langsam biologisch abbaubar.
13. **Entsorgung**		Das Produkt und die Verpackung müssen in Übereinstimmung mit den geltenden Bestimmungen entsorgt werden.
14. **Transportklassifizierung**		Nicht als für den Luft-, See- oder Straßentransport gefährlich eingestuft.
17. **Informationen zu geltenden Bestimmungen**		Keine

18. **Weitere Informationen**

NFPA-BWERTUNG

ENTZÜNDLICHKEIT	1
GESUNDHEITSRISIKO	0
REAKTIVITÄT	0
BESONDERE GEFAHREN	KEINE

Inspiring Excellence™

Varian S.p.A.
Via F.lli Varian, 54
10040 Leinì (TO) - Italy
Tél.: +39-011-9979-111
Fax:+39-011-9979-237
http://www.varianinc.com

Varian GP - OIL - Fiche technique de sécurité sur les matériaux

DATE DE RÉVISION DÉCEMBRE 2002

1. **Substance/Identification entreprise**	NOM DE PRODUIT:	**VARIAN GP-OIL 949-9390/949-9391** **NUMERO CAS : 64742-65-0**
2. **Composition/Ingrédients**	NOM GÉNÉRIQUE:	100% Huile de paraffine neutre de raffinage avec solvant
	FORMULE CHIMIQUE:	(CH2)n 20 =< n =< 40
	INGRÉDIENTS DANGEREUX:	Aucun
3. **Identification de risques**	VOIES POSSIBLES D'ABSORPTION:	Ingestion, inhalation de vapeurs d'huile. Ce produit n'est pas classifié comme dangereux.
	EFFETS AIGUS:	L'exposition aux vapeurs d'huiles peut causer des nausées et l'irritation des yeux. Des études détaillées n'ont pas été effectuées, mais on ne s'attend pas à ce que le matériel provoque des dermatites ou une sensibilisation de la peau.
	EFFETS CHRONIQUES:	Inconnue
4. **Premiers soins**	PEAU:	Laver avec de l'eau savonneuse.
	YEUX:	Rincer avec de l'eau. Contacter un médecin!
	INGESTION:	Faire absorber des liquides et provoquer le vomissement si la victime est consciente. Contacter un médecin ! De petites quantités présentes dans la bouche peuvent être éliminées par lavage.
5. **Mesures de lutte contre les incendies**	POINT D'INFLAMMABILITÉ:	> 213° C
	MÉTHODE EMPLOYÉE:	Cleveland Open Cup
	LIMITES D'EXPLOSION:	INFÉRIEURE : Inconnue
		SUPÉRIEURE : Inconnue
	MOYENS D'EXTINCTION:	Eau nébulisée, mousse chimique ou gaz carbonique. Matériau Classe III B NFPA.

Varian S.p.A.
Via F.lli Varian, 54
10040 Leinì (TO) - Italy
Tél.: +39-011-9979-111
Fax:+39-011-9979-237
http://www.varianinc.com

	PROCÉDURES SPÉCIALES DE LUTTE CONTRE LES INCENDIES :	Porter un respirateur en combattant des incendies dans des espaces fermés; la combustion incomplète de ce matériau produit de l'oxyde de carbone!
	DANGERS EXCEPTIONNELS DE FEU ET/OU D'EXPLOSION	Aucun
6. **Mesures en cas d'émissions accidentelles**	PROCÉDURES A SUIVRE EN CAS D'ÉMISSIONS:	De petites quantités peuvent être essuyées à l'aide d'un chiffon. De grandes quantités doivent être enlevées à l'aide d'un absorbant.
7. **Manipulation et stockage**	MANIPULATION :	Aucun risque connu
	STOCKAGE :	Aucun risque connu
8. **Contrôles de l'exposition / Protection personnelle**	MESURES DE CONTRÔLE TECHNIQUE	Aucune mesure nécessaire
	PROTECTION RESPIRATOIRE:	Voir les notes sur la ventilation ci-dessous.
	GANTS DE PROTECTION:	Oui - en caoutchouc imperméable à l'huile.
	LUNETTES DE SÉCURITÉ:	Oui - les lunettes doivent avoir des oeillères latérales.
	AUTRE MATÉRIEL DE PROTECTION:	Aucun n'est nécessaire lors d'une utilisation normale.
9. **Propriétés physiques et chimiques**	ÉTAT PHYSIQUE:	Liquide
	PRESSION DE VAPEUR:	< 0001 Torr à 25° C
	POINT D'ÉBULLITION:	> 200° C
	TAUX D'ÉVAPORATION (éther=1):	Zéro
	DENSITÉ DE VAPEUR:	environ 14
	% PRODUITS VOLATILES EN POIDS:	Zéro
	POIDS SPÉCIFIQUE:	0.87
	VISCOSITÉ:	54 cst à 40° C
	HYDROSOLUBILITÉ:	Zéro
	ASPECT:	Liquide visqueux jaune pâle avec une légère odeur de pétrole.

VARIAN

Varian S.p.A.
Via F.lli Varian, 54
10040 Leinì (TO) - Italy
Tél.: +39-011-9979-111
Fax:+39-011-9979-237
http://www.varianinc.com

10. **Stabilité et réactivité**	STABILITÉ:	Le matériau est stable
	CONDITIONS À ÉVITER:	Exposition continue aux températures > à 200° C
	INCOMPATIBILITÉ (MATÉRIAUX À ÉVITER):	Oxydants forts
	PRODUITS DE DÉCOMPOSITION DANGEREUX:	La combustion incomplète peut produire de l'oxyde de carbone.
11. **Informations toxicologiques**	LD50 ORAL AIGU (MG/KG):	Aucun risque connu
	LD 50 CUTANÉ AIGU:	Aucun
	INHALATION AIGUË:	La limite prévue par l'administration des USA pour TWA de 8 heures d'exposition aux vapeurs d'huile est de 5 mg par mètre cube.
12. **Informations écologiques**	ENVIRONNEMENT :	Si le produit est utilisé et/ou mis au rebut de la façon indiquée, aucun effet défavorable sur l'environnement n'est prévu.
	MOBILITÉ :	Non volatile et insoluble dans l'eau.
	DEGRADABILITÉ :	Lentement biodégradable en conditions aérobiques
13. **Considérations pour la mise au rebut**		Le produit et le conditionnement doivent être mis au rebut dans le respect des règlements nationaux, régionaux et locaux.
14. **Classification pour le transport**		N'est pas classifié comme dangereux pour le transport par air, mer ou route.
15. **Informations sur le réglementation**		Aucune

16. **Autres informations**

EVALUATION NFPA

INFLAMMABILITÉ	1
RISQUE SANITAIRE	0
RÉACTIVITÉ	0
RISQUES SPÉCIAUX	AUCUN

Inspiring Excellence™

Varian S.p.A.
Via F.lli Varian, 54
10040 Leinì (TO) - Italy
Ph: +39-011-9979-111
Fax:+39-011-9979-237
http://www.varianinc.com

Varian GP - OIL - Material Safety Data Sheet

REVISION DATE DECEMBER 2002

1. **Substance/Company Identification**	PRODUCT NAME:	**VARIAN GP-OIL 949-9390/949-9391** **CAS NUMBER: 64742-65-0**
2. **Composition/Ingredients**	GENERIC NAME:	100% Solvent refined Neutral paraffinic oil
	CHEMICAL FORMULA:	(CH2)n 20 =< n =< 40
	HAZARDOUS INGREDIENTS:	None
3. **Hazards Identification**	POSSIBLE ENTRY ROUTES:	Ingestion, inhalation of oil mists This product is not classified as hazardous.
	ACUTE EFFECTS:	Exposure to oils mists may cause nausea and eye irritation. Detailed studies have not been made, but material is not expected to be dermatitic or a sensitizer.
	CHRONIC EFFECTS:	Unknown
4. **First Aid Measures**	SKIN:	Wash with soap and water.
	EYES:	Flush with water. Contact a physician!
	INGESTION:	Give liquids and induce vomiting if victim is conscious. Contact a physician! Small amounts in mouth may be washed out.
5. **Fire Fighting Measures**	FLASH POINT:	>213° C
	METHOD USED:	Cleveland Open Cup
	EXPLOSIVE LIMITS:	LOWER: Unknown
		UPPER: Unknown
	EXTINGUISHING MEDIA:	Water fog, chemical foam or carbon dioxide. NFPA Class III B Material.

Varian S.p.A.
Via F.lli Varian, 54
10040 Leinì (TO) - Italy
Ph: +39-011-9979-111
Fax:+39-011-9979-237
http://www.varianinc.com

	SPECIAL FIREFIGHTING PROCEDURES:	Wear breathing gear when fighting fires in enclosed spaces; incomplete combustion of this material produces carbon monoxide!
	UNUSUAL FIRE AND/OR EXPLOSION HAZARDS:	None
6. **Accidental Release Measures**	PROCEDURES TO BE FOLLOWED IN EVENT OF RELEASE:	Small spills may be wiped up with a rag. Large spills should be picked up immediately with an absorbent.
7. **Handling and Storage**	HANDLING:	None Known
	STORAGE:	None Known
8. **Exposure Controls/Personal Protection**	ENGINEERING CONTROL MEASURES:	None required
	RESPIRATORY PROTECTION:	See notes on ventilation below.
	PROTECTIVE GLOVES:	Yes - made of oil-impermeable rubber.
	SAFETY GLASSES/GOGGLES:	Yes - glasses should have side shields.
	OTHER PROTECTIVE EQUIPMENT:	None should be required under normal use.
9. **Physical & Chemical Properties**	PHYSICAL STATE:	Liquid
	VAPOR PRESSURE:	< 0001 Torr at 25° C
	BOILING POINT:	>200° C
	EVAPORATION RATE (ether=1):	Nil
	VAPOR DENSITY:	approximately 14
	WT%VOLATILES:	Nil
	SPECIFIC GRAVITY:	0.87
	VISCOSITY:	54 cst at 40° C
	SOLUBILITY IN WATER:	Nil
	APPEARANCE:	Pale yellow viscous liquid with a faint petroleum odor.

Varian S.p.A.
Via F.lli Varian, 54
10040 Leinì (TO) - Italy
Ph: +39-011-9979-111
Fax:+39-011-9979-237
http://www.varianinc.com

10. **Stability & Reactivity**	STABILITY:	Material is stable
	CONDITIONS TO AVOID:	Continuous exposure to temperatures > 200° C
	INCOMPATIBILITY (MATERIALS TO AVOID):	Strong oxidizers
	HAZARDOUS DECOMPOSITION PRODUCTS:	Incomplete combustion may produce carbon monoxide.
11. **Toxicological Information**	ACUTE ORAL LD50 (MG/KG):	None known
	ACUTE DERMAL LD 50:	None
	ACUTE INHALATION:	US Gov't 8 hr TWA limit for exposure to oil mists is 5 mg per cubic meter.
12. **Ecological Information**	ENVIRONMENTAL:	When used and/or disposed of as indicated, no adverse environmental effects are foreseen.
	MOBILITY:	Non-volatile and insoluble in water.
	DEGRADABILITY:	Slowly biodegradable in aerobic conditions.
13. **Disposal Considerations**		Product and packaging must be disposed of in accordance with Federal, State and local regulations.
14. **Transport Classification**		Not classified as hazardous for transport by air, sea or road.
15. **Regulatory Information**		None
16. **Other Information**	**NFPA RATING**	

FLAMMABILITY	1
HEALTH HAZARD	0
REACTIVITY	0
SPECIAL HAZARD	NONE

Inspiring Excellence™

VARIAN

Request for Return

ISO 9001 REGISTERED

1. A Return Authorization Number (RA#) **WILL NOT** be issued until this Request for Return is completely filled out, signed and returned to Varian Customer Service.
2. Return shipments shall be made in compliance with local and international **Shipping Regulations** (IATA, DOT, UN).
3. The customer is expected to take the following actions to ensure the **Safety** of workers at Varian: (a) Drain any oils or other liquids, (b) Purge or flush all gasses, (c) Wipe off any excess residues in or on the equipment, (d) Package the equipment to prevent shipping damage, (for Advance Exchanges please use packing material from replacement unit).
4. Make sure the shipping documents clearly show the RA# and then return the package to the Varian location nearest you.

North and South America
Varian Vacuum Technologies
121 Hartwell Ave
Lexington, MA 02421
Phone : +1 781 8617200
Fax: +1 781 8609252

Europe and Middle East
Varian SpA
Via Flli Varian 54
10040 Leini (TO) – ITALY
Phone: +39 011 9979111
Fax: +39 011 9979330

Asia and ROW
Varian Vacuum Technologies
Local Office

CUSTOMER INFORMATION

Company name: ……

Contact person: Name: …… Tel: ……

Fax: …… E-Mail: ……

Ship Method: …… Shipping Collect #: …… P.O.#: ……

Europe only: VAT reg. Number: …… *USA only*: ☐ Taxable ☐ Non-taxable

Customer Ship To: …… Customer Bill To: ……

……

……

……

……

PRODUCT IDENTIFICATION

Product Description	Varian P/N	Varian S/N	Purchase Reference

TYPE OF RETURN *(check appropriate box)*

☐ Paid Exchange ☐ Paid Repair ☐ Warranty Exchange ☐ Warranty Repair ☐ Loaner Return
☐ Credit ☐ Shipping Error ☐ Evaluation Return ☐ Calibration ☐ Other ……

HEALTH and SAFETY CERTIFICATION

Varian Vacuum Technologies **CAN NOT ACCEPT** any equipment which contains **BIOLOGICAL HAZARDS** or **RADIOACTIVITY**. Call Varian Customer Service to discuss alternatives if this requirement presents a problem.

The equipment listed above (check one):

☐ **HAS NOT** been exposed to any toxic or hazardous materials

OR

☐ **HAS** been exposed to any toxic or hazardous materials. In case of this selection, check boxes for any materials that equipment was exposed to, check all categories that apply:

☐ Toxic ☐ Corrosive ☐ Reactive ☐ Flammable ☐ Explosive ☐ Biological ☐ Radioactive

List all toxic or hazardous materials. Include product name, chemical name and chemical symbol or formula.

……

Print Name: …… Customer Authorized Signature: ……

Print Title: …… Date: ……/……/……

NOTE: If a product is received at Varian which is contaminated with a toxic or hazardous material that was not disclosed, **the customer will be held responsible** for all costs incurred to ensure the safe handling of the product, and **is liable** for any harm or injury to Varian employees as well as to any third party occurring as a result of exposure to toxic or hazardous materials present in the product.

Do not write below this line

Notification (RA)#: …… Customer ID#: …… Equipment #: ……

VARIAN

Request for Return

ISO 9001 REGISTERED

FAILURE REPORT

TURBO PUMPS and TURBOCONTROLLERS

		POSITION	PARAMETERS	
☐ Does not start	☐ Noise	☐ Vertical	Power:	Rotational Speed:
☐ Does not spin freely	☐ Vibrations	☐ Horizontal	Current:	Inlet Pressure:
☐ Does not reach full speed	☐ Leak	☐ Upside-down	Temp 1:	Foreline Pressure:
☐ Mechanical Contact	☐ Overtemperature	☐ Other:	Temp 2:	Purge flow:
☐ Cooling defective		……	OPERATION TIME:	

TURBOCONTROLLER ERROR MESSAGE:

ION PUMPS/CONTROLLERS

☐ Bad feedthrough	☐ Poor vacuum
☐ Vacuum leak	☐ High voltage problem
☐ Error code on display	☐ Other

Customer application:

VALVES/COMPONENTS

☐ Main seal leak	☐ Bellows leak
☐ Solenoid failure	☐ Damaged flange
☐ Damaged sealing area	☐ Other

Customer application:

LEAK DETECTORS

☐ Cannot calibrate	☐ No zero/high backround
☐ Vacuum system unstable	☐ Cannot reach test mode
☐ Failed to start	☐ Other

Customer application:

INSTRUMENTS

☐ Gauge tube not working	☐ Display problem
☐ Communication failure	☐ Degas not working
☐ Error code on display	☐ Other

Customer application:

PRIMARY PUMPS

☐ Pump doesn't start	☐ Noisy pump (describe)
☐ Doesn't reach vacuum	☐ Over temperature
☐ Pump seized	☐ Other

Customer application:

DIFFUSION PUMPS

☐ Heater failure	☐ Electrical problem
☐ Doesn't reach vacuum	☐ Cooling coil damage
☐ Vacuum leak	☐ Other

Customer application:

FAILURE DESCRIPTION

(Please describe in detail the nature of the malfunction to assist us in performing failure analysis):

NOTA: Su richiesta questo documento è disponibile anche in Tedesco, Italiano e Francese.
REMARQUE : Sur demande ce document est également disponible en allemand, italien et français.
HINWEIS: Auf Aufrage ist diese Unterlage auch auf Deutsch, Italienisch und Französisch erhältlich.

Sales and Service Offices

Argentina
Varian Argentina Ltd.
Sucursal Argentina
Av. Ricardo Balbin 2316
1428 Buenos Aires
Argentina
Tel: (54) 1 783 5306
Fax: (54) 1 786 5172

Benelux
Varian Vacuum Technologies
Rijksstraatweg 269 H,
3956 CP Leersum
The Netherlands
Tel: (31) 343 469910
Fax: (31) 343 469961

Brazil
Varian Industria e Comercio Ltda.
Avenida Dr. Cardoso de Mello 1644
Vila Olimpia
Sao Paulo 04548 005
Brazil
Tel: (55) 11 3845 0444
Fax: (55) 11 3845 9350

Canada
Central coordination through:
Varian Vacuum Technologies
121 Hartwell Avenue
Lexington, MA 02421
USA
Tel: (781) 861 7200
Fax: (781) 860 5437
Toll Free # 1 (800) 882 7426

China
Varian Technologies - Beijing
Room 1201, Jinyu Mansion
No. 129A, Xuanwumen Xidajie
Xicheng District
Beijing 100031 P.R. China
Tel: (86) 10 6641 1530
Fax: (86) 10 6641 1534

France and Wallonie
Varian s.a.
7 avenue des Tropiques
Z.A. de Courtaboeuf - B.P. 12
Les Ulis cedex (Orsay) 91941
France
Tel: (33) 1 69 86 38 13
Fax: (33) 1 69 28 23 08

Germany and Austria
Varian Deutschland GmbH
Alsfelder Strasse 6
Postfach 11 14 35
64289 Darmstadt
Germany
Tel: (49) 6151 703 353
Fax: (49) 6151 703 302

India
Varian India PVT LTD
101-108, 1st Floor
1010 Competent House
7, Nangal Raya Business Centre
New Delhi 110 046
India
Tel: (91) 11 5548444
Fax: (91) 11 5548445

Italy
Varian Vacuum Technologies
via F.lli Varian 54
10040 Leini, (Torino)
Italy
Tel: (39) 011 997 9 111
Fax: (39) 011 997 9 350

Japan
Varian Vacuum Technologies
Sumitomo Shibaura Building, 8th Floor
4-16-36 Shibaura
Minato-ku, Tokyo 108
Japan
Tel: (81) 3 5232 1253
Fax: (81) 3 5232 1263

Korea
Varian Technologies Korea, Ltd
Shinsa 2nd Bldg. 2F
966-5 Daechi-dong
Kangnam-gu, Seoul
Korea 135-280
Tel: (82) 2 3452 2452
Fax: (82) 2 3452 2451

Mexico
Varian, S. de R.L. de C.V.
Concepcion Beistegui No 109
Col Del Valle
C.P. 03100
Mexico, D.F.
Tel: (52) 5 523 9465
Fax: (52) 5 523 9472

Taiwan
Varian Technologies Asia Ltd.
14F-6, No.77, Hsin Tai Wu Rd., Sec. 1
Hsi chih, Taipei Hsien
Taiwan, R.O.C.
Tel: (886) 2 2698 9555
Fax: (886) 2 2698 9678

UK and Ireland
Varian Ltd.
28 Manor Road
Walton-On-Thames
Surrey KT 12 2QF
England
Tel: (44) 1932 89 8000
Fax: (44) 1932 22 8769

United States
Varian Vacuum Technologies
121 Hartwell Avenue
Lexington, MA 02421
USA
Tel: (781) 861 7200
Fax: (781) 860 5437

Other Countries
Varian Vacuum Technologies
via F.lli Varian 54
10040 Leini, (Torino)
Italy
Tel: (39) 011 997 9 111
Fax: (39) 011 997 9 350

Customer Support & Service:

North America
Tel: 1 (800) 882 7426 (toll-free)
vtl.technical.support@varianinc.com

Europe
Tel: 00 (800) 234 234 00 (toll-free)
vtt.technical.support@varianinc.com

Japan
Tel: (81) 3 5232 1253 (dedicated line)
vtj.technical.support@varianinc.com

Korea
Tel: (82) 2 3452 2452 (dedicated line)
vtk.technical.support@varianinc.com

Taiwan
Tel: 0 (800) 051 342 (toll-free)
vtw.technical.support@varianinc.com

Worldwide Web Site, Catalog and Order On-line:
www.varianinc.com

Representative in most countries

VARIAN

07/03